THORNTONS

317 MYATT DRIVE
MADISON, TN

RECORD BOOK 2331, PAGE, 12 METRO NASHVILLE DAVIDSON COUNTY

DEVELOPMENT SUMMARY

- SPECIFIC PLAN PURPOSE NOTE:
  THE PURPOSE OF THIS APPLICATION IS FOR APPROVAL OF A FINAL SITE PLAN THAT IS CONSISTENT WITH THE GENERAL CONCEPT OF THE COUNCIL APPROVED SPECIFIC PLAN DISTRICT.
- SPECIFIC PLAN LAND USAGE:
  GENERAL, COMMERCIAL SERVICE CONVENIENCE STORE WITH GASOLINE SERVICE.
- SPECIFIC PLAN NAME: THORNTONS MYATT DRIVE
- COUNCIL DISTRICT: NINTH
- APPLICANT: GPD GROUP – ATTN: MIKE RUBINO
  520 SOUTH MAIN STREET #2531
  AKRON, OH 44311
  330-572-2262
  E:mail: MRUBINO@GPDROUP.COM
- THIS PROPERTY IS NOT LOCATED IN A FLOOD HAZARD AREA AS PER FEDERAL EMERGENCY MANAGEMENT AGENCY FLOOD BOUNDARY AND FLOODWAY MAP COMMUNITY MAP. No. 47037C0139 F DATED: APRIL 20, 2001.

METRO PLANNING COMMISSION
CONDTIONS OF APPROVAL

- THE CORRECTED COPY OF THE FINAL SITE PLAN SHALL INCLUDE SIGN DETAILS THAT HAVE BEEN REVIEWED AND APPROVED BY STAFF
- THE CORRECTED COPY OF THE FINAL SITE PLAN SHALL COMPLY WITH THE REQUIREMENTS OF THE STORM WATER MANAGEMENT DIVISION OF WATER SERVICES
- PRIOR TO THE ISSUANCE OF ANY PERMITS, CONFIRMATION OF PUD FINAL SITE PLAN APPROVAL OF THIS PROPOSAL SHALL BE FORWARDED TO THE PLANNING COMMISSION BY THE TRAFFIC ENGINEERING SECTION OF THE METRO DEPARTMENT OF PUBLIC WORKS FOR ALL IMPROVEMENTS WITHIN THE PUBLIC RIGHT OF WAY.
- THE REQUIREMENTS OF THE METRO FIRE MARSHALS OFFICE FOR EMERGENCY VEHICLE ACCESS AND ADEQUATE WATER SUPPLY FOR FIRE PROTECTION MUST BE ME PRIOR TO THE ISSUANCE OF ANY BUILDING PERMITS.
- AUTHORIZATION FOR THE ISSUANCE OF PERMIT APPLICATION SWILL NOT BE FORWARDED TO THE DEPARTMENT OF CODES ADMINISTRATION UNTIL FOUR ADDITIONAL COPIES OF THE APPROVED PLANS HAVE BEEN SUBMITTED TO THE METRO PLANNING COMMISSION
- AUTHORIZATION FOR THE ISSUANCE OF PERMIT APPLICATION SWILL NOT BE FORWARDED TO THE DEPARTMENT OF CODES ADMINISTRATION UNTIL FOUR ADDITIONAL COPIES OF THE APPROVED PLANS HAVE BEEN SUBMITTED TO THE METRO PLANNING COMMISSION
- THE PUD FINAL SITE PLAN AS APPROVED BY THE PLANNING COMMISSION WILL BE USED THE THE DEPARTMENT OF CODES ADMINISTRATION TO DETERMINE COMPLIANCE, BOTH IN THE ISSUANCE OF PERMITS FOR CONSTRUCTION AND FIELD INSPECTION. SIGNIFICANT DEVIATION FROM THESE PLANS MAY REQUIRE REAPPROVAL BY THE PLANNING COMMISSION AND/OR METRO COUNCIL.
- A CORRECTED COPY OF THE PUD FINAL SITE PLAN INCORPORATING THE CONDITIONS OF APPROVAL BY THE PLANNING COMMISSION SHALL BE PROVIDED TO THE PLANNING DEPARTMENT PRIOR TO THE ISSUANCE OF PERMITS FOR THIS PROPERTY AND IN ANY EVENT NO LATER THAN 120 DAYS AFTER THE DATE OF CONDITIONAL APPROVAL BY THE PLANNING COMMISSION FAILURE TO SUBMIT A CORRECTED COPY OF THE FINAL PUD SITE PLAN WITHIN 120 DAYS WILL VOID THE COMMISSION'S APPROVAL AND REQUIRE RESUBMISSION OF THE PLAN TO THE PLANNING COMMISSION.

LOCATION MAP

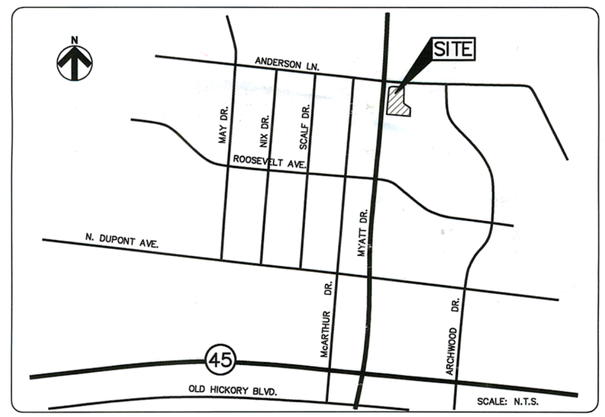

SITE DATA

- 9th Council District, Jim Forkum Councilman
- Owner of record: Map 43–7, Parcel 69 & 70
  MAT REAL ESTATE LLC
  10101 Linn Station Road
  Louisville, Kentucky 40223
  MR MATT THORNTON
  Phone # (502) 339–8385
- Property is located in Subarea 4.
- Subdivision Name: Revision of Archwood Acres, Section 2
- This is a Standard/Regular Subdivision
- Plan Date: June 11, 2008
- Scale 1" = 20'
- Consultant: GPD ASSOCIATES
  520 South Main Street #2531
  Akron, OH 44311
  Phone # (330) 572–2100
  Fax # (330) 572–2101
  E-mail mrubino@gpdgroup.com
- FEMA/FIRM Community Panel No. 47037C 0139 F, Dated April 20, 2001 Zone "X"

SP PRELIMINARY PLAN APPROVAL

☒ PRELIMINARY, ☐ FINAL, ☒ as AMENDED, in ☐ FULL, ☒ CONDITIONAL, compliance with the SP provisions of the Metropolitan Zoning Ordinance.
Conditions See staff Report

By JHS MPC Date 8/14/08
Metropolitan Planning Commission

INDEX OF SHEETS

G–001	COVER SHEET
C–001	GENERAL NOTES
C–101	DEMOLITION PLAN
C–111	SITE PLAN
C–121	GRADING PLAN
C–131	SWPP PLAN AND DETAILS
C–132	SWPP DETAILS
C–141	UTILITY PLAN
C–501	DETAILS
C–502	DETAILS
C–503	DETAILS
L–001	LANDSCAPE SPECIFICATIONS
L–101	LANDSCAPE PLAN
L–501	LANDSCAPE DETAILS
1 OF 1	ALTA/ACSM LAND TITLE SURVEY

BENCHMARKS

BENCHMARKS:

HORIZONTAL COORDINATES AND VERTICAL DATA, NAVD 88, BASED UPON AN OPUS SOLUTION NOVEMBER 7, 2007.

BENCHMARK #1 – TOP OF COVER OF A SANITARY SEWER MANHOLE LOCATED S 87°05'51 W, A DISTANCE OF 66.92 FEET FROM THE SOUTHWEST CORNER OF TRACT 2, LOT 32 ARCHWOOD ACRES SUBDIVISION SECTION 2.
ELEVATION=502.66

OCT 06 2008

REVISIONS

DATE	DESCRIPTION	BY
10.2.08	SUFFICIENCY REVIEW COMMENTS SWGR T2008-00080	

DAVID B. GRANGER
LICENSED PROFESSIONAL ENGINEER
MECHANICAL
STATE OF TENNESSEE
10-2-2008

THORNTONS
10101 LINN STATION ROAD, SUITE 300, LOUISVILLE, KY. 40223 502-426-9022

MYATT DRIVE AND ANDERSON LANE
MADISON, TN

COVER SHEET

DESIGN: K.J.B. | DRAFTING: D.J.H.
SCALE: AS NOTED | DATE: 6–18–08

CLAUS PYLE SCHOMER BURNS & DEHAVEN INC.
GPD ASSOCIATES
520 South Main Street, Suite 2531, Akron, Ohio 44311
330-572-2100, Fax 330-572-2101

PROJECT NO.
G-001

DEMOLITION NOTES

1. DEMOLITION INCLUDES THE FOLLOWING WITHIN THE PROPERTY LINES:
   - 1.1. TRANSFER BENCHMARK CONTROL TO NEW LOCATIONS OUTSIDE THE DISTURBED AREA PRIOR TO COMMENCING DEMOLITION OPERATIONS (WHEN APPLICABLE).
   - 1.2. PROVIDE TEMPORARY BARRICADES AND OTHER FORMS OF PROTECTION AS REQUIRED TO PROTECT OWNER'S PERSONNEL AND GENERAL PUBLIC FROM INJURY DUE TO DEMOLITION WORK.
   - 1.3. DEMOLITION AND REMOVAL OF SITE IMPROVEMENTS.
   - 1.4. DISCONNECTING, CAPPING OR SEALING, AND ABANDONING/REMOVING SITE UTILITIES IN PLACE (WHICHEVER IS APPLICABLE).
2. REMOVE: REMOVE AND LEGALLY DISPOSE OF ITEMS EXCEPT THOSE INDICATED TO BE REINSTALLED, SALVAGED, OR TO REMAIN.
3. REMOVE, REINSTALL, AND RELOCATE: REMOVE ITEMS INDICATED; CLEAN, SERVICE, AND OTHERWISE PREPARE THEM FOR REUSE; STORE AND PROTECT AGAINST DAMAGE. REINSTALL ITEMS IN LOCATIONS INDICATED.
4. EXISTING TO REMAIN: PROTECT ITEMS INDICATED TO REMAIN AGAINST DAMAGE AND SOILING THROUGHOUT CONSTRUCTION. WHEN PERMITTED BY THE ENGINEER, ITEMS MAY BE REMOVED TO A SUITABLE, PROTECTED STORAGE LOCATION THROUGHOUT CONSTRUCTION AND THEN CLEANED AND REINSTALLED IN THEIR ORIGINAL LOCATIONS.
5. CONTRACTOR SHALL SCHEDULE DEMOLITION ACTIVITIES WITH THE CONSTRUCTION/PROJECT MANAGER INCLUDING THE FOLLOWING:
   - 5.1. DETAILED SEQUENCE OF DEMOLITION AND REMOVAL WORK, WITH STARTING AND ENDING DATES FOR EACH ACTIVITY.
   - 5.2. DATES FOR SHUTOFF, CAPPING, AND CONTINUATION OF UTILITY SERVICES.
   - 5.3. IDENTIFY AND ACCURATELY LOCATE UTILITIES AND OTHER SUBSURFACE STRUCTURAL, ELECTRICAL, OR MECHANICAL CONDITIONS.
6. REGULATORY REQUIREMENTS: COMPLY WITH GOVERNING EPA NOTIFICATION REGULATIONS BEFORE STARTING DEMOLITION. COMPLY WITH HAULING AND DISPOSAL REGULATIONS OF AUTHORITIES HAVING JURISDICTION.
7. STORAGE OR SALE OF REMOVED ITEMS OR MATERIALS ON-SITE WILL NOT BE PERMITTED.
8. OBTAIN APPROVED BORROW SOIL MATERIALS OFF-SITE WHEN SUFFICIENT SATISFACTORY SOIL MATERIALS ARE NOT AVAILABLE ON-SITE.
9. MAINTAIN EXISTING UTILITIES INDICATED TO REMAIN IN SERVICE AND PROTECT THEM AGAINST DAMAGE THROUGHOUT CONSTRUCTION OPERATIONS.
   - 9.1. DO NOT INTERRUPT EXISTING UTILITIES SERVING OCCUPIED OR OPERATING FACILITIES, EXCEPT WHEN AUTHORIZED IN WRITING BY ENGINEER AND AUTHORITIES HAVING JURISDICTION. PROVIDE TEMPORARY SERVICES DURING INTERRUPTIONS TO EXISTING UTILITIES, AS ACCEPTABLE TO OWNER AND TO GOVERNING AUTHORITIES.
10. DO NOT START DEMOLITION WORK UNTIL UTILITY DISCONNECTING AND SEALING HAVE BEEN COMPLETED AND VERIFIED IN WRITING.
11. UTILITY REQUIREMENTS: LOCATE, IDENTIFY, DISCONNECT, AND SEAL OR CAP OFF INDICATED UTILITY SERVICES SERVING THE SITE.
    - 11.1. ARRANGE TO SHUT OFF AND CAP UTILITIES WITH UTILITY COMPANIES AND FOLLOW THEIR RESPECTIVE UTILITY KILL AND CAP POLICIES.
    - 11.2. ALL EXISTING UNDERGROUND UTILITIES SHOWN ARE APPROXIMATE AND ARE TO BE VERIFIED BY CONTRACTOR. THORNTON INC. DOES NOT ACCEPT ANY RESPONSIBILITY FOR THE ACCURACY OF EXISTING UTILITIES INDICATED ON THE CONSTRUCTION DOCUMENTS. VERIFY LOCATION OF EXISTING UTILITIES AND EXERCISE EVERY PRECAUTION WHEN WORKING ON OR NEAR THESE AREAS TO AVOID DAMAGE TO THESE EXISTING FACILITIES. UTILITY LINES MAY BE ENCOUNTERED IN EXCAVATION THAT WERE NOT KNOWN OR SHOWN TO EXIST, SO CAUTION SHALL BE TAKEN IN ALL EXCAVATIONS. ACTIVE OR INACTIVE UTILITIES ENCOUNTERED BY THE CONTRACTOR SHALL BE HANDLED IN ACCORDANCE WITH THE REQUIREMENTS OR THE UTILITY COMPANIES.
12. CONDUCT DEMOLITION OPERATIONS TO PREVENT INJURY TO PEOPLE AND DAMAGE TO ADJACENT BUILDINGS AND FACILITIES TO REMAIN. ENSURE SAFE PASSAGE OF PEOPLE AROUND DEMOLITION AREA.
    - 12.1. ERECT TEMPORARY PROTECTION, BARRICADES AS PER LOCAL GOVERNING AUTHORITIES.
    - 12.2. PROTECT EXISTING SITE IMPROVEMENTS AND APPURTENANCES TO REMAIN.
13. EXPLOSIVES: USE OF EXPLOSIVES WILL NOT BE PERMITTED.
14. REMOVE AND TRANSPORT DEBRIS IN A MANNER THAT WILL PREVENT SPILLAGE ON ADJACENT SURFACES AND AREAS.
15. CLEAN ADJACENT BUILDINGS AND IMPROVEMENT OF DUST, DIRT, AND DEBRIS CAUSED BY DEMOLITION OPERATIONS. RETURN ADJACENT AREAS TO CONDITION EXISTING BEFORE START OF DEMOLITION.
16. DAMAGES: PROMPTLY REPAIR DAMAGES TO ADJACENT FACILITIES CAUSED BY DEMOLITION OPERATIONS AT THE CONTRACTORS COST.
17. GENERAL: PROMPTLY DISPOSE OF DEMOLISHED MATERIALS. DO NOT ALLOW DEMOLISHED MATERIALS TO ACCUMULATE ON-SITE.
18. BURNING: DO NOT BURN DEMOLISHED MATERIALS.
19. ASBESTOS: IT IS NOT EXPECTED THAT ASBESTOS WILL BE ENCOUNTERED IN THE COURSE OF THIS CONTRACT. IF ANY MATERIALS SUSPECTED OF CONTAINING ASBESTOS ARE ENCOUNTERED, DO NOT DISTURB THE MATERIALS. IMMEDIATELY NOTIFY THE ENGINEER AND THE OWNER.
20. SURVEY THE CONDITION OF THE BUILDING TO DETERMINE WHETHER REMOVING ANY ELEMENT MIGHT RESULT IN A STRUCTURAL DEFICIENCY OR UNPLANNED COLLAPSE OF ANY PORTION OF THE STRUCTURE OR ADJACENT STRUCTURES THROUGHOUT CONSTRUCTION.
21. BUILDING PAD DEMOLITION: DEMOLISH BUILDING PAD COMPLETELY AND REMOVE FROM THE SITE. USE METHODS REQUIRED TO COMPLETE WORK WITHIN LIMITATIONS OF GOVERNING REGULATIONS AND AS FOLLOWS:
    - 21.1. DISPOSE OF DEMOLISHED ITEMS AND MATERIALS PROMPTLY.
    - 21.2. DEMOLISH CONCRETE AND MASONRY IN SMALL SECTIONS.
    - 21.3. BREAK UP AND REMOVE CONCRETE SLABS ON GRADE.
22. BELOW-GRADE DEMOLITION: DEMOLISH FOUNDATION WALLS AND OTHER BELOW-GRADE DEMOLITION, AS FOLLOWS:
    - 22.1. COMPLETELY REMOVE BELOW-GRADE DEMOLITION, INCLUDING FOUNDATION WALLS FOOTINGS, AND BELOW GRADE CONCRETE SLABS.
23. FILLING BELOW-GRADE AREAS: COMPLETELY FILL BELOW-GRADE AREAS AND VOIDS RESULTING FROM DEMOLITION OF BUILDINGS AND PAVEMENTS WITH SOIL MATERIALS ACCORDING TO REQUIREMENTS PER SOILS REPORT. CONTRACTOR SHALL CONTACT ENGINEER PRIOR TO FILLING ANY AREAS. CONTRACTOR SHALL CONTACT ENGINEER TO OBSERVE FILL PROCEDURES.
24. CONDUCT DEMOLITION OPERATIONS AND REMOVE DEBRIS TO ENSURE MINIMUM INTERFERENCE WITH ROADS, STREETS, WALKS, AND OTHER ADJACENT OCCUPIED AND USED FACILITIES.
    - 24.1. DO NOT CLOSE OR OBSTRUCT STREETS, WALKS, OR OTHER ADJACENT OCCUPIED OR USED FACILITIES WITHOUT PERMISSION FROM OWNER AND AUTHORITIES HAVING JURISDICTION. PROVIDE ALTERNATE ROUTES AROUND CLOSED OR OBSTRUCTED TRAFFIC WAYS IF REQUIRED BY GOVERNING REGULATIONS.
    - 24.2. PROVIDE TEMPORARY FENCES, BARRICADES, COVERINGS OR OTHER PROTECTIONS TO PRESERVE EXISTING ITEMS INDICATED TO REMAIN AND TO PREVENT INJURY OR DAMAGE TO PERSONS OR PROPERTY. APPLY PROTECTIONS TO ADJACENT PROPERTIES AS REQUIRED.
25. CONTRACTOR TO SAWCUT EXISTING PAVEMENT TO REMAIN PRIOR TO CURB, GUTTER, PAVEMENT, ETC REMOVAL.

ENVIRONMENTAL NOTES

1. CONTRACTOR SHALL BE AWARE THAT THE SITE MAY POTENTIALLY CONTAIN PETROLEUM RELATED CONTAMINANTS. THE CONTRACTOR SHALL INFORM AND REQUIRE ALL CONSTRUCTION WORKERS, UTILITY COMPANIES AND ALL SUBCONTRACTORS TO IMPLEMENT PROTECTIVE MEASURES CONSISTENT WITH GOOD INDUSTRIAL HYGIENE PRACTICE.
2. CONTRACTOR SHALL FOLLOW ALL LOCAL AND STATE EPA RULES AND REGULATIONS FOR STOCKPILING, TESTING AND/OR HANDLING OF SUSPECT MATERIALS.
3. IT SHALL BE THE CONTRACTOR'S SOLE RESPONSIBILITY (AT HIS OWN COST) TO HIRE A LICENSED ENVIRONMENTAL CONSULTANT FOR TESTING OF SUSPECT CONTAMINATED SOILS. CONTRACTOR SHALL PROVIDE COPIES OF ENVIRONMENTAL TEST REPORTS TO CONSTRUCTION/PROJECT MANAGER. CONTRACTOR TO COORDINATE REUSE, REMOVAL AND DISPOSAL OF ALL EXCAVATED MATERIAL THROUGH THE LICENSED ENVIRONMENTAL CONSULTANT.
4. THIS SITE IS PART OF
   FEMA FIRM MAP NUMBER 47037C0139F.
   PANEL: 139 OF 453.
   EFFECTIVE: APRIL 20, 2001

GENERAL PLAN NOTES

1. PRIOR TO STARTING CONSTRUCTION THE CONTRACTOR SHALL BE RESPONSIBLE TO MAKE SURE THAT ALL REQUIRED PERMITS AND APPROVALS HAVE BEEN OBTAINED. NO CONSTRUCTION OR FABRICATION SHALL BEGIN UNTIL THE CONTRACTOR HAS RECEIVED AND THOROUGHLY REVIEWED ALL PLANS AND OTHER DOCUMENTS APPROVED BY ALL OF THE PERMITTING AUTHORITIES.
2. ALL WORK SHALL BE PERFORMED IN ACCORDANCE WITH THESE PLANS, SPECIFICATIONS AND THE REQUIREMENTS AND STANDARDS OF THE LOCAL GOVERNING AUTHORITY. THE SOILS REPORT AND RECOMMENDATIONS SET FORTH THEREIN ARE A PART OF THE REQUIRED CONSTRUCTION DOCUMENTS AND TAKE PRECEDENCE UNLESS SPECIFICALLY NOTED OTHERWISE ON THE PLANS. THE CONTRACTOR SHALL NOTIFY THE CONSTRUCTION/PROJECT MANAGER OF ANY DISCREPANCY BETWEEN SOILS REPORT AND PLANS, ETC.
3. THE A.L.T.A. SURVEY SHALL BE CONSIDERED A PART OF THESE PLANS. THE G.C. IS RESPONSIBLE FOR LOCATING IMPROVEMENTS PER THESE PLANS.
4. UPON RECEIPT OF POINT COORDINATE DATA, THE CONTRACTOR SHALL RUN AN INDEPENDENT VERTICAL CONTROL TRAVERSE TO CHECK BENCHMARKS AND A HORIZONTAL CONTROL TRAVERSE THROUGH GIVEN POINTS TO CONFIRM GEOMETRIC DATA AND SUBMIT TO THE ENGINEER PRIOR TO ANY CONSTRUCTION.
5. THE LOCATIONS OF UNDERGROUND FACILITIES SHOWN ON THE PLAN ARE BASED ON FIELD SURVEYS. IT SHALL BE THE CONTRACTOR'S FULL RESPONSIBILITY TO CONTACT THE VARIOUS UTILITY COMPANIES TO LOCATE THEIR FACILITIES PRIOR TO STARTING CONSTRUCTION. NO ADDITIONAL COMPENSATION SHALL BE PAID TO THE CONTRACTOR FOR DAMAGE AND REPAIR TO THESE FACILITIES CAUSED BY HIS WORK FORCE.

GENERAL PLAN NOTES (CONT.)

6. ALL DIMENSIONS, GRADES, AND UTILITY LOCATIONS SHOWN ON THESE PLANS WERE BASED ON ALTA SURVEY. THE CONTRACTOR SHALL FIELD VERIFY ALL EXISTING CONDITIONS PRIOR TO CONSTRUCTION. CONTRACTOR SHALL NOTIFY CONSTRUCTION/PROJECT MANAGER IF ANY DISCREPANCIES EXIST PRIOR TO PROCEEDING WITH CONSTRUCTION FOR NECESSARY CHANGES. NO EXTRA COMPENSATION SHALL BE PAID TO THE CONTRACTOR FOR WORK HAVING TO BE REDONE DUE TO INFORMATION SHOWN INCORRECTLY ON THESE PLANS IF SUCH NOTIFICATION HAS NOT BEEN GIVEN.
7. ALL WORK WITHIN THE RIGHTS OF WAY SHALL BE IN ACCORDANCE WITH THE GOVERNING JURISDICTION AND SPECIFICATIONS.
8. CONTRACTOR SHALL COORDINATE ANY MAINTENANCE OF TRAFFIC WITH THE OWNER'S REPRESENTATIVE AND THE LOCAL JURISDICTION PRIOR TO CONSTRUCTION.
9. CONTRACTOR SHALL AT ALL TIMES ENSURE THAT SWPP MEASURES PROTECTING EXISTING DRAINAGE FACILITIES BE IN PLACE PRIOR TO THE COMMENCEMENT OF ANY PHASE OF THE SITE CONSTRUCTION OR LAND ALTERATION. (SEE SHEET C-131).
10. GEOMETRIC POINTS AND COORDINATES FOR TWO (2) BUILDING CORNERS CAN BE PROVIDED TO CONTRACTOR, UPON REQUEST, PRIOR TO CONSTRUCTION. NOTIFY ENGINEER 2 DAYS PRIOR.
11. UPON COMPLETION OF PROJECT, CONTRACTOR SHALL CLEAN THE PAVED AREAS PRIOR TO REMOVAL OF TEMPORARY SEDIMENT CONTROLS, AS DIRECTED BY THE CITY AND/OR CONSTRUCTION/PROJECT MANAGER. IF POWER WASHING IS USED, NO SEDIMENT LADEN WATER SHALL BE WASHED INTO THE STORM SYSTEM. ALL SEDIMENT LADEN MATERIAL ON PAVEMENT OR WITHIN THE STORM SYSTEM SHALL BE COLLECTED AND REMOVED FROM THE SITE AT CONTRACTOR'S EXPENSE.
12. THE CONTRACTOR WILL, UPON BECOMING AWARE OF SUBSURFACE OR LATENT PHYSICAL CONDITIONS DIFFERING FROM THOSE DISCLOSED BY THE ORIGINAL SOIL EXPLORATION WORK, PROMPTLY NOTIFY THE OWNER VERBALLY TO PERMIT VERIFICATION OF THE CONDITIONS AND IN WRITING, AS TO THE NATURE OF THE DIFFERING CONDITIONS. NO CLAIM BY THE CONTRACTOR FOR ANY CONDITIONS DIFFERING FROM THOSE ANTICIPATED IN THE PLAN AND SPECIFICATIONS AND DISCLOSED BY THE SOIL STUDIES WILL BE ALLOWED UNLESS THE CONTRACTOR HAS SO NOTIFIED THE OWNER, VERBALLY AND IN WRITING AS REQUIRED ABOVE, OF SUCH DIFFERING CONDITIONS.

SITE PLAN NOTES

1. ALL DIMENSIONS AND RADII ARE GIVEN TO FACE OF CURB UNLESS OTHERWISE NOTED.
2. ASPHALT PAVING: DO NOT APPLY PRIME AND TACK COATS WHEN TEMPERATURE IS BELOW 50° F, OR WHEN BASE IS WET. APPLY ASPHALT PAVING ONLY WHEN TEMPERATURE IS ABOVE 40° F AND WHEN BASE IS DRY.
3. MATERIALS:
   - 3.A. SUBGRADE: COHESIVE SUBGRADE SHALL BE COMPACTED TO 95% COMPACTION. COHESION LESS SUBGRADE SHALL BE COMPACTED TO 100% COMPACTION.
   - 3.B. SUBBASE: UNLESS OTHERWISE NOTED ON THESE PLANS, BASE SHALL CONSIST OF WATER BONDED LIMESTONE, CRUSHED ROCK OR DGA.
   - 3.C. ASPHALT: BITUMINOUS CONCRETE HOT PLANT MIX BINDER COURSE AND ASPHALT TOPPING PLANT MIX SHALL BE APPLIED OVER BASE, MINIMUM TEMPERATURE TIME OF PLACEMENT SHALL BE 225° F.
   - 3.D. MATERIALS: NO MORE THAN 40% WEAR, MORE THAN 6, THAN 70 POUNDS, ASTM C-29 (LATEST ED.) PER SQUARE YARD, GALLONS PER SQUARE YARD.
4. SUBGRADE SHALL BE FREE OF EXTRANEOUS MATERIALS. PROOF-ROLL SOIL SUBGRADE WITH HEAVY, PNEUMATIC TIRED EQUIPMENT IMMEDIATELY PRIOR TO PLACING STONE BASE. ANY SOFT OR UNSTABLE ZONES DETECTED THEREBY SHALL BE UNDERCUT TO FIRM SOIL AND BACKFILLED WITH ENGINEERED EARTH FILL COMPACTED AS SPECIFIED. THE SUBGRADE FOR ALL PAVEMENTS SHALL BE UNIFORMLY STABLE BEFORE ANY STONE BASE IS INSTALLED. NO BASE MATERIAL SHALL BE PLACED IF THE SUBGRADE INDICATES PUMPING.
5. SURFACE PREPARATION, SPREADING AND LAYING, COMPACTING AND ROLLING OPERATIONS SHALL CONFORM WITH ASPHALT INSTITUTE RECOMMENDED SPECIFICATIONS.
6. INSPECT AREA TO BE PAVED AND INSURE THAT ALL SUBGRADE CONDITIONS ARE SUFFICIENTLY CARRIED OUT TO INSURE A GOOD PAVING JOB. A FINISHED SURFACE SHALL NOT VARY MORE THAN 1/8" IN 10 FEET WHEN TESTED WITH A STRAIGHT EDGE APPLIED PARALLEL WITH, OR AT RIGHT ANGLES, TO CENTERLINE OF ASPHALT SURFACE. HUMPS OR DEPRESSIONS WHICH EXCEED SPECIFIED TOLERANCES OR WHICH RETAIN WATER SHALL BE IMMEDIATELY CORRECTED BY REMOVING THE DEFECTIVE WORK AND REPLACING IT WITH NEW MATERIAL AT THE CONTRACTOR'S EXPENSE.
7. LOT CORE SAMPLES SHALL BE TAKEN AT LOCATIONS DETERMINED BY THE OWNER TO DETERMINE COMPLIANCE WITH THESE SPECIFICATIONS.
8. CAST IN PLACE CONCRETE: ALL CONCRETE WORK SHALL CONFORM TO ALL REQUIREMENTS OF AMERICAN CONCRETE INSTITUTE ACI 301 AND APPLICABLE SECTIONS OF ASTM C-94 (LATEST ED.) FOR READY MIXED CONCRETE.
9. ALL CONCRETE SHALL BE IN-TRANSIT MIXED CONCRETE, 3% TO 5% AIR-ENTRAINED AND SHALL ATTAIN A MINIMUM COMPRESSIVE STRENGTH OF 3,000 P.S.I. IN TWENTY-EIGHT (28) DAYS.
10. SLUMP: MAXIMUM ALLOWABLE SLUMP WILL BE FIVE (5) INCHES.
11. CONCRETE MATERIALS:
    - 11.A. PORTLAND CEMENT: GRAY PORTLAND CEMENT, ASTM C-150 (LATEST ED.) TYPE 1. ALL CONCRETE SHALL CONTAIN NOT LESS THAN FIVE BAGS OF CEMENT PER CUBIC YARD.
    - 11.B. AGGREGATES: ASTM C-33 (LATEST ED.).
    - 11.C. SAND: HARD, DURABLE, CLEAN, SHARP, NATURAL SAND FREE FROM CLAY, LOAM, DUST OR ORGANIC MATTER.
    - 11.D. WATER: CLEAN, POTABLE, FREE FROM OIL, ACIDS, ALKALI, ORGANIC MATTER AND OTHER DELETERIOUS SUBSTANCES.
    - 11.E. ADMIXTURE: AIR-ENTRAINING TYPE TO MEET ASTM C-260 (LATEST ED.)
12. RELATED MATERIALS:
    - 12.A. CURING COMPOUND: "HORNCURE 300" AS MANUFACTURED BY A.C. HORN COMPANY, (800) 654-0402. THIS PRODUCT IS NOT TO BE USED ON THE INTERIOR FLOOR SLAB.
13. REINFORCING MATERIALS SHALL BE UNCOATED AND FREE FROM EXCESSIVE RUST, MILL SCALE, OIL, GREASE AND OTHER DELETERIOUS MATTER.
14. ALL ABOVE GRADE EXTERIOR CONCRETE SURFACES SHALL BE CURED WITH CURING COMPOUND SPRAYED ON IN STRICT COMPLIANCE WITH MANUFACTURER'S DIRECTIONS.
15. WEATHER REQUIREMENTS:
    - 15.A. HOT WEATHER PLACING: NO CONCRETE SHALL BE PLACED WHEN THE AIR TEMPERATURE IS GREATER THAN 90° F UNLESS THE FOLLOWING SPECIAL PROCEDURES HAVE BEEN INCLUDED IN THE CONTRACT AND REVIEWED BY THE ENGINEER: TEMPERATURE OF THE CONCRETE WHEN PLACED SHALL NOT BE GREATER THAN 90° F. PROCEDURES FOR COOLING, RETARDING AND PROTECTING IN-PLACE CONCRETE DURING HOT WEATHER SHALL BE IN ACCORDANCE WITH ACI 305. PROVIDE SPECIAL PROCEDURES REQUIRED TO CONTROL CONCRETE TEMPERATURE AND TO PROTECT SURFACES FROM DRYING OUT. MIXING WATER MAY BE CHILLED OR CHOPPED ICE MAY BE USED TO CONTROL TEMPERATURE PROVIDED WATER EQUIVALENT OF ICE IS CALCULATED TO TOTAL AMOUNT OF MIXING WATER. USE OF LIQUID NITROGEN TO COOL CONCRETE IS THE CONTRACTOR'S OPTION.
    - 15.B. COLD WEATHER PLACING: DO NOT MIX OR PLACE WHEN ATMOSPHERIC TEMPERATURE WILL FALL BELOW 40° F, OR WHEN CONDITIONS INDICATE TEMPERATURE WILL FALL BELOW 40° F WITHIN 72 HOURS. CONCRETE DEPOSITED SHALL HAVE TEMPERATURE NOT LESS THAN 60° F. REINFORCEMENT, FORMS AND GROUND WHICH CONCRETE WILL CONTACT SHALL BE COMPLETELY FREE OF FROST. KEEP CONCRETE AND FORM WORK AT A TEMPERATURE NOT LESS THAN 50° F FOR NOT LESS THAN 72 HOURS AFTER POURING. COMPLY WITH REQUIREMENTS OF ACI 305 (LATEST ED.) FOR COLD WEATHER PROTECTION.
16. CONCRETE TESTS SHALL BE AUTHORIZED BY THE OWNER ON AN AS NEEDED BASIS.
17. ALL EXTERIOR CURB SHALL HAVE EXPANSION JOINTS AT 100'-0" O.C, AND CONTROL JOINTS AT 10'-0" O.C. (UNLESS OTHERWISE SPECIFIED ON THE DETAIL SHEETS) ALL EXTERIOR WALK SHALL HAVE EXPANSION JOINTS AT 20'-0" O.C. AND CONTROL JOINTS @ 5'-0" MAX. O.C. (UNLESS OTHERWISE SPECIFIED ON THE DETAIL SHEETS).
18. ALL CONCRETE SHALL HAVE A MEDIUM TRANSVERSE FINISH.

GRADING PLAN NOTES

1. BEFORE STARTING GRADING OPERATIONS, SEE SHEET C-131, STORMWATER POLLUTION PREVENTION PLAN NOTES AND DETAILS (SWPP).
2. BEFORE STARTING GRADING OPERATIONS, SEE LANDSCAPE PLAN L-101 AND SOILS REPORT FOR TREATMENT OF EXISTING GRADE.
3. PRIOR TO SITE CONSTRUCTION ACTIVITY, THE CONTRACTOR SHALL INSTALL ALL SWPP MEASURES TO PROTECT EXISTING DRAINAGE FACILITIES. CONTRACTOR SHALL PREVENT SILTATION FROM LEAVING THE SITE AT ALL TIMES.
4. MAINTAIN TEMPORARY BARRICADES, FENCES AND BRIDGES AROUND EXCAVATED AREAS, WITH WARNING SIGNS AND/OR LIGHTS AS REQUIRED BY CODE TO PROTECT PUBLIC AND WORKMEN FROM INJURY DURING WORK CARRIED OUT UNDER THIS CONTRACT.
5. STRIP BUILDING AND PAVEMENT AREAS OF ALL ORGANIC TOPSOILS. STOCKPILE SUITABLE TOPSOILS FOR RESPREADING ONTO LANDSCAPE AREAS. ALL EXCESS EXCAVATED MATERIALS SHALL BE REMOVED FROM THE SITE AT THE CONTRACTOR'S EXPENSE. SEE GEOTECHNICAL REPORT FOR STRIPPING AND TOPSOIL REQUIREMENTS.
6. SITE GRADING SHALL BE PERFORMED IN ACCORDANCE WITH THESE PLANS AND SPECIFICATIONS AND THE RECOMMENDATIONS SET FORTH IN THE SOILS REPORT REFERENCED IN THIS PLAN SET. THE CONTRACTOR SHALL BE RESPONSIBLE FOR REMOVING ALL SOFT, YIELDING OR UNSUITABLE MATERIALS AND REPLACING WITH SUITABLE MATERIALS AS SPECIFIED IN THE SOILS REPORT. UNLESS OTHERWISE SPECIFIED IN THE PLANS, SPECIFICATIONS, OR SOILS REPORT THE SITE GRADING, EXCAVATION, AND EMBANKMENT SHALL BE IN ACCORDANCE WITH THE STATE DEPARTMENT OF TRANSPORTATION CONSTRUCTION AND MATERIAL SPECIFICATIONS.
7. ALL EXCAVATED OR FILLED AREAS SHALL BE COMPACTED TO 98% OF STANDARD PROCTOR MAXIMUM DRY DENSITY PER A.S.T.M. TEST D-698. MOISTURE CONTENT AT TIME OF PLACEMENT SHALL NOT EXCEED 2% ABOVE NOR 3% BELOW OPTIMUM. CONTRACTOR SHALL SUBMIT A COMPACTION REPORT PREPARED BY A QUALIFIED SOILS ENGINEER REGISTERED WITHIN THE STATE WHERE THE WORK IS PERFORMED, VERIFYING THAT ALL FILLED AREAS AND SUBGRADE AREAS WITHIN THE BUILDING PAD AREA AND AREAS TO BE PAVED HAVE BEEN COMPACTED IN ACCORDANCE WITH THESE PLANS AND SPECIFICATIONS AND THE RECOMMENDATIONS SET FORTH IN THE SOILS REPORT. NOTIFY PROJECT ENGINEER IF ANY UNSUITABLE SOILS ARE FOUND.
8. COMPACTION TESTING IS MANDATORY FOR PARKING LOT, BUILDING SLAB AND FOUNDATIONS SUB-GRADE.

GRADING PLAN NOTES (CONT.)

9. FILL UNDER PAVED AREAS AND SLABS ON GRADE SHALL BE COMPACTED TO 95% STANDARD PROCTOR. DEPOSIT FILL MATERIAL IN HORIZONTAL LAYERS AS RECOMMENDED BY SOILS REPORT AND COMPACT EACH LAYER WITH A MECHANICAL TAMPER.
10. FOLLOWING GRADING OF SUBSOIL TO SUBGRADE ELEVATIONS THE CONTRACTOR SHALL PLACE TOPSOIL TO A 6" DEPTH IN ALL DISTURBED AREAS WHICH ARE NOT TO BE PAVED. SMOOTHLY FINISH GRADE TO MEET SURROUNDING LAWN AREAS AND ENSURE POSITIVE DRAINAGE. STOCKPILED TOPSOIL SHALL BE SCREENED PRIOR TO RESPREADING. TOPSOIL SHALL BE FREE OF SUBSOIL, DEBRIS, BRUSH AND STONES LARGER THAN 1" IN ANY DIMENSION. ROCK HOUNDING IN PLACE WILL NOT BE PERMITTED. ALL EXCESS TOPSOIL SHALL BE LEGALLY DISPOSED OF OFF SITE.
11. ELEVATIONS GIVEN ARE AT BOTTOM FACE OF CURB AND/OR FINISHED PAVEMENT GRADE UNLESS OTHERWISE SPECIFIED ON GRADING PLAN. ALL PAVEMENT SHALL BE LAID ON A STRAIGHT, EVEN, AND UNIFORM GRADE WITH A MINIMUM OF 1% SLOPE TOWARD THE COLLECTION POINTS UNLESS OTHERWISE SPECIFIED ON THE GRADING PLAN. DO NOT ALLOW NEGATIVE GRADES OR PONDING OF WATER.
12. SLOPE BUILDING SIDEWALK AWAY FROM THE BUILDING WITH A MAXIMUM OF 1/4" PER FOOT (UNLESS OTHERWISE INDICATED ON SHEET C-121).
13. CONTRACTOR SHALL PROVIDE BUTT END JOINT TO MEET EXISTING PAVEMENT IN ELEVATION AT DRIVE RETURNS AND ENSURE POSITIVE DRAINAGE.

SWPP NOTES

1. SEE SHEET C-131 FOR ALL SWPP MEASURES AND REQUIREMENTS.

UTILITY NOTES

GENERAL UTILITY NOTES

1. CONTRACTOR SHALL CONTACT ALL UTILITY COMPANIES IMMEDIATELY AFTER BID IS AWARDED AND ENSURE THE UTILITY COMPANIES HAVE THE ESSENTIALS REQUIRED FOR COMPLETE SERVICE INSTALLATION. CONTRACTOR SHALL NOTIFY CONSTRUCTION MANAGER AND ENGINEER OF ANY TIME FRAMES ESTABLISHED BY UTILITY COMPANIES WHICH WILL NOT MEET OPENING DATE.
2. CONTRACTOR SHALL VERIFY THE SIZE, LOCATION, INVERT ELEVATION, AND CONDITION OF EXISTING UTILITIES WHICH ARE INTENDED TO BE UTILIZED AS A CONNECTION POINT FOR ALL PROPOSED UTILITIES (SEE SHEET C-141), PRIOR TO ANY CONSTRUCTION. CONTRACTOR TO ENSURE EXISTING UTILITIES ARE IN GOOD CONDITION AND FREE FLOWING (IF APPLICABLE). IF ELEVATIONS, SIZE, OR LOCATION DIFFER FROM WHAT IS SHOWN ON SHEET C-141, CONTRACTOR SHALL NOTIFY ENGINEER IMMEDIATELY.

STORM SEWER NOTES

1. ALL STORM SEWER PIPE 12" OR GREATER IN DIAMETER SHALL BE CORRUGATED HIGH DENSITY POLYETHYLENE (HDPE) SMOOTH INTERIOR PIPE (UNLESS OTHERWISE NOTED ON PLAN). HDPE PIPE SHALL CONFORM TO ASTM D 3350 AND JOINTS PER ASTM F477. STORM SEWER LESS THAN 12" IN DIAMETER SHALL BE PVC, SDR 35, PER ASTM D 3034 AND JOINTS PER ASTM D 3212 (OR APPROVED EQUAL).
2. THE CONTRACTOR SHALL BE RESPONSIBLE FOR ALL TRENCHING, BACKFILLING AND PIPE INSTALLATION, PIPE MATERIAL AND TAP CONNECTION. COORDINATE ALL WORK WITH THE METRO NASHVILLE DEPARTMENT OF WATER & SEWERAGE SERVICES, SHANE SLOAN @ (615) 862-4598.

SANITARY SEWER NOTES

1. SANITARY SEWER LATERAL INVERT AT BUILDING SHALL BE A MINIMUM OF ????' BELOW FINISH FLOOR.
2. CLEAN-OUTS TO BE INSTALLED AT ALL PIPE BENDS AND ANGLES, UNLESS A MANHOLE IS INDICATED.
3. THE CONTRACTOR SHALL HIRE A LOCAL PLUMBER LICENSED WITH THE LOCAL SANITARY JURISDICTION TO MAKE ALL CONNECTIONS FROM THE BUILDING TO THE EXISTING MANHOLE. CONTRACTOR SHALL SECURE A SANITARY SEWER CONNECTION PERMIT PRIOR TO ANY CONSTRUCTION. THE CONTRACTORS PRICE FOR SANITARY SEWER INSTALLATION SHALL INCLUDE ALL FEES AND APPURTENANCES REQUIRED BY THE LOCAL SANITARY JURISDICTION TO PROVIDE A COMPLETE WORKING SERVICE. COORDINATE ALL WORK WITH THE METRO NASHVILLE DEPARTMENT OF WATER & SEWERAGE SERVICES, SHANE SLOAN @ (615) 862-4598.
4. ALL SANITARY PIPE MATERIAL SHALL BE 6" PVC, SDR 35 CONFORMING TO ASTM D 3034, WITH JOINTS PER ASTM 3212.

WATER NOTES

1. WATER SERVICE MATERIALS SHALL BE COPPER TYPE "K" UNLESS OTHERWISE NOTED ON PLANS. DIAMETER SHALL BE AS NOTED ON THESE PLANS (SHEET C-141) AND SHALL BE INSTALLED WITH A MINIMUM COVER OF 42" OR BELOW FROST LINE, WHICHEVER IS GREATER.
2. CONSTRUCTION AND MATERIALS PROVIDED BY THE WATER COMPANY:
   - TAP MAIN.
   - FURNISH AND INSTALL CURB STOP & BOX AND WATER METER.
   - COORDINATE ALL WORK WITH THE MADISON SUBURBAN UTILITY DISTRICT, MARK JOHNSON @ (615) 868-3201.
3. CONSTRUCTION AND MATERIALS PROVIDED BY THE CONTRACTOR:
   - FURNISH AND INSTALL COPPER SERVICE LINE FROM METER TO BUILDING.
   - ALL TRENCHING AND BACKFILLING.
4. CONTRACTOR SHALL PROVIDE 100% IRRIGATION PER CONSTRUCTION/PROJECT MANAGER AND CITY REQUIREMENTS. COORDINATE SLEEVE LOCATIONS WITH THE CONSTRUCTION/PROJECT MANAGER AND IRRIGATION CONSULTANT PRIOR TO PAVEMENT AND CURB INSTALLATION.

ELECTRICAL NOTES

1. SEE ELECTRICAL DRAWINGS FOR SITE LIGHTING AND LUMINAIRE DESCRIPTION.
2. SEE ELECTRICAL SHEETS FOR ALL DEDICATED EXTERIOR BUILDING AND SIGN LIGHTING SCHEDULES. ELECTRICAL CONTRACTOR SHALL BALANCE LOADS WHERE REQUIRED.
3. ALL PARKING LOT LIGHTING WIRING SHALL BE NO. 10 AWG IN 3/4" PVC DUCT.
4. WHEN INSTALLING VERTICAL SWEEPS FOR UTILITY CONDUITS, CONTRACTOR SHALL USE 4" SCHD. 80 DUCTS.
5. CONSTRUCTION AND MATERIALS PROVIDED BY THE ELECTRIC COMPANY:
   - FURNISH AND INSTALL POLE MOUNTED TRANSFORMER.
   - MAKE APPROPRIATE PRIMARY AND SECONDARY CONNECTIONS AT TRANSFORMER.
   - FURNISH AND INSTALL METER.
   - RUN CONDUIT UP POLE.
   - COORDINATE ALL WORK WITH NASHVILLE ELECTRIC SERVICE, RICK PERRIGO @ (615) 747-3947.
6. CONSTRUCTION AND MATERIALS PROVIDED BY THE CONTRACTOR:
   - FURNISH AND INSTALL 2-4" PVC SCHEDULE 40 DUCTS, INCLUDING ALL TRENCHING AND BACKFILLING FROM TRANSFORMER TO BUILDING.
   - FURNISH AND INSTALL SECONDARY WIRE FROM THE BUILDING TO THE TRANSFORMER.
   - FURNISH AND INSTALL METER BASE AND CT CABINET.
   - INCLUDE ALL FEES REQUIRED BY ELECTRIC COMPANY TO PROVIDE A COMPLETE WORKING SERVICE.

TELEPHONE NOTES

1. CONSTRUCTION AND MATERIALS PROVIDED BY THE TELEPHONE COMPANY:
   - COORDINATE ALL WORK WITH BELL SOUTH/AT&T, B.J. COOPER @ (615) 214-7336.
   - PROVIDE AND INSTALL WIRING TO EXISTING SERVICE MANHOLE.
2. CONSTRUCTION AND MATERIALS PROVIDED BY THE CONTRACTOR:
   - FURNISH AND INSTALL ONE 4" PVC SCH. 40 CONDUIT WITH PULLWIRE FROM THE BUILDING TO EXISTING SERVICE.
   - ALL TRENCHING AND BACKFILLING.
   - INCLUDE ALL FEES REQUIRED BY TELEPHONE COMPANY TO PROVIDE A COMPLETE WORKING SERVICE.
3. CONTRACTOR SHALL COORDINATE THE NUMBER OF LINES REQUIRED WITH THE CONSTRUCTION/ PROJECT MANAGER.

NATURAL GAS NOTES

1. CONSTRUCTION AND MATERIALS PROVIDED BY THE GAS COMPANY:
   - TAP MAIN.
   - FURNISH AND INSTALL SERVICE FROM TAP TO BUILDING.
   - ALL TRENCHING AND BACKFILLING.
   - FURNISH AND INSTALL METER.
   - COORDINATE ALL WORK WITH NASHVILLE GAS COMPANY, JOHN SATTY @ (615) 734-1854.
2. CONSTRUCTION AND MATERIALS PROVIDED BY THE CONTRACTOR:
   - FURNISH AND INSTALL SERVICE FROM METER TO BUILDING AND THROUGHOUT THE BUILDING.
   - CONTRACTOR SHALL INCLUDE ALL FEES REQUIRED BY THE GAS COMPANY TO PROVIDE A COMPLETE WORKING SERVICE.

GENERAL LEGEND

EXISTING

Symbol	Description
P/L	PROPERTY LINE
C/L	CENTER LINE
R/W	EXISTING RIGHT-OF-WAY LINE
R/W	PROPOSED RIGHT-OF-WAY LINE
F-R/W	FUTURE RIGHT-OF-WAY LINE
	EXISTING CURB INLET
	EXISTING SANITARY MANHOLE
	EXISTING FIRE HYDRANT
	EXISTING WATER VALVE
W	EXISTING WATER METER
	EXISTING UTILITY POLE
	EXISTING GUY WIRE
OH	EXISTING OVERHEAD UTILITIES
XX" ST	EXISTING STORM SEWER
XX" SAN	EXISTING SANITARY SEWER
XX" W	EXISTING WATER SERVICE
GAS	EXISTING GAS SERVICE
	EXISTING CURB
	EXISTING FENCE
	EXISTING TREE
	EXISTING LANDSCAPING
000	EXISTING CONTOUR
	EASEMENT LIMITS
BM #	BENCHMARK LOCATION

PROPOSED

Symbol	Description
	PROPOSED CATCH BASIN
	PROPOSED STORM MANHOLE
	PROPOSED HEADWALL
	PROPOSED SANITARY MANHOLE
E	PROPOSED ELECTRIC TRANSFORMER
	PROPOSED LIGHT POLE
	PROPOSED LIGHT FIXTURES
	PROPOSED LIGHT POST
	PROPOSED ELECTRIC METER
A	PROPOSED AIR COMPRESSOR
M	PROPOSED GAS METER
K	PROPOSED KEROSINE PUMP
	PROPOSED GAS ISLAND
	PROPOSED CURB
	PROPOSED WALL
	PROPOSED FENCE
	PROPOSED TRAFFIC SIGN
	PROPOSED MONUMENT SIGN
T	PROPOSED TRASH CONTAINER (BY OTHERS)
	PROPOSED BUMPER PIPE
ICE	PROPOSED ICE CHEST
	PROPOSED PROPANE TANK ENCLOSURE
	PROPOSED PAINTED ADA SYMBOL
	PROPOSED TRANSVERSE STRIPING
	PROPOSED CROSSWALK STRIPING
	PROPOSED ROCK CHANNEL PROTECTION
	PROPOSED CONCRETE
	PROPOSED BRICK PAVEMENT

IN ACCORDANCE WITH THE METRO STORMWATER MANAGEMENT MANUAL, VOLUME 1, SECTION 3.9, AS-BUILT CERTIFICATIONS, MWS STORMWATER DIVISION MUST APPROVE THE FOLLOWING AS-BUILTS PRIOR TO ISSUANCE OF THE USE AND OCCUPANCY PERMIT:
- UNDERGROUND DETENTION AND WATER QUALITY INFRASTRUCTURE
- ABOVE GROUND DETENTION AND WATER QUALITY INFRASTRUCTURE
- PUBLIC STORM SEWER INFRASTUCTURE
- CUT AND FILL IN THE FLOODPLAIN
- SINK HOLE ALTERATIONS

REVISIONS

DATE	DESCRIPTION	BY
10.2.08	SUFFICIENCY REVIEW COMMENTS SWGR T2008000190	

DAVID B. GRANGER
REGISTERED ENGINEER
STATE OF TENNESSEE

THORNTONS
1001 LINN STATION ROAD, SUITE 200, LOUISVILLE, KY. 40223 502-425-8022

MYATT DRIVE AND ANDERSON LANE
MADISON, TN

GENERAL NOTES

CLAUS PYLE SCHOMER BURNS & DEHAVEN INC.
GPD ASSOCIATES
520 South Main Street, Suite 2531 Akron, Ohio 44311
330-572-2100, Fax 330-572-2101

DESIGN: K.J.B. | DRAFTING: D.J.H.
SCALE: NO SCALE | DATE: 6-18-08

PROJECT NO.
C-001

N

0 20
10 40
1"=20'
Horizontal
Scale in Feet

DEMOLITION NOTES

1. EXISTING CURB TO BE REMOVED.
2. EXISTING PAVEMENT TO BE REMOVED.
3. SAWCUT EXISTING PAVEMENT EDGE TO ACHEIVE CLEAN, STRAIGHT EDGE.
4. EXISTING BUILDING/STRUCTURE TO BE REMOVED.
5. EXISTING LANDSCAPING (INCLUDING BUSHES, ETC.) TO BE REMOVED.
6. EXISTING TREE TO BE REMOVED.
7. EXISTING HEADWALL TO BE REMOVED.
8. EXISTING DRIVE CULVERT TO BE REMOVED.
9. EXISTING 42" ARCH PIPE AND HEADWALL TO BE REMOVED.
10. EXISTING FENCE TO BE REMOVED.
11. EXISTING CURB TO REMAIN AND BE PROTECTED THROUGHOUT CONSTRUCTION.
12. EXISTING PAVEMENT TO REMAIN AND BE PROTECTED THROUGHOUT CONSTRUCTION.
13. EXISTING UTILITIES TO REMAIN AND BE PROTECTED THROUGHOUT CONSTRUCTION.
14. EXISTING LANDSCAPING (INCLUDING BUSHES, TREES, ETC.) TO REMAIN AND BE PROTECTED THROUGHOUT CONSTRUCTION.
15. EXISTING FENCE TO REMAIN AND BE PROTECTED THROUGHOUT CONSTRUCTION.

LEGEND

(SEE SHEET C-001 FOR GENERAL LEGEND)

- EXISTING HEADWALL TO BE REMOVED
- ST — EXISTING DRIVE CULVERT TO BE REMOVED
- EXISTING CURB TO BE REMOVED
- EXISTING FENCE TO BE REMOVED
- EXISTING TREE TO BE REMOVED
- EXISTING WOODED AREA TO BE REMOVED
- EXISTING ASPHALT TO BE REMOVED
- EXISTING CONCRETE TO BE REMOVED
- EXISTING GRAVEL TO BE REMOVED
- EXISTING BUILDING/STRUCTURE TO BE REMOVED
- ##L.F.± — DENOTES LIMITS OF SAWCUT
- # — DEMOLITION NOTE

BENCHMARKS:

HORIZONTAL COORDINATES AND VERTICAL DATA, NAVD 88, BASED UPON AN OPUS SOLUTION NOVEMBER 7, 2007.

BENCHMARK #1 – TOP OF COVER OF A SANITARY SEWER MANHOLE LOCATED S 67°05'51 W, A DISTANCE OF 66.92 FEET FROM THE SOUTHWEST CORNER OF TRACT 2, LOT 32 ARCHWOOD ACRES SUBDIVISION SECTION 2.
ELEVATION=502.66

TENNESSEE ONE CALL SYSTEM, INC.

STOP–CALL BEFORE YOU DIG!
THREE FULL WORKING DAYS BEFORE YOU DIG, CALL

1–(800)–351–1111

REVISIONS

DATE	DESCRIPTION	BY
9.5.08	SUFFICIENCY REVIEW COMMENTS REPORT T2008000000	

DAVID B. GRANGER
STATE OF TENNESSEE

THORNTONS
1000 LAKE STATION ROAD, SUITE 200, LOUISVILLE, KY. 40223 502-426-0026

MYATT DRIVE AND ANDERSON LANE
MADISON, TN

DEMOLITION PLAN

DRAFTING: D.J.H.
DATE: 6-18-08
DESIGN: K.J.B.
SCALE: 1"=20'

GILAUS PYLE SCHROMER BURNS & DEWENTER INC.
GPD ASSOCIATES
520 South Main Street, Suite 2531 Akron, Ohio 44311
330-572-2100 / Fax 330-572-2101

PROJECT NO.
C-101

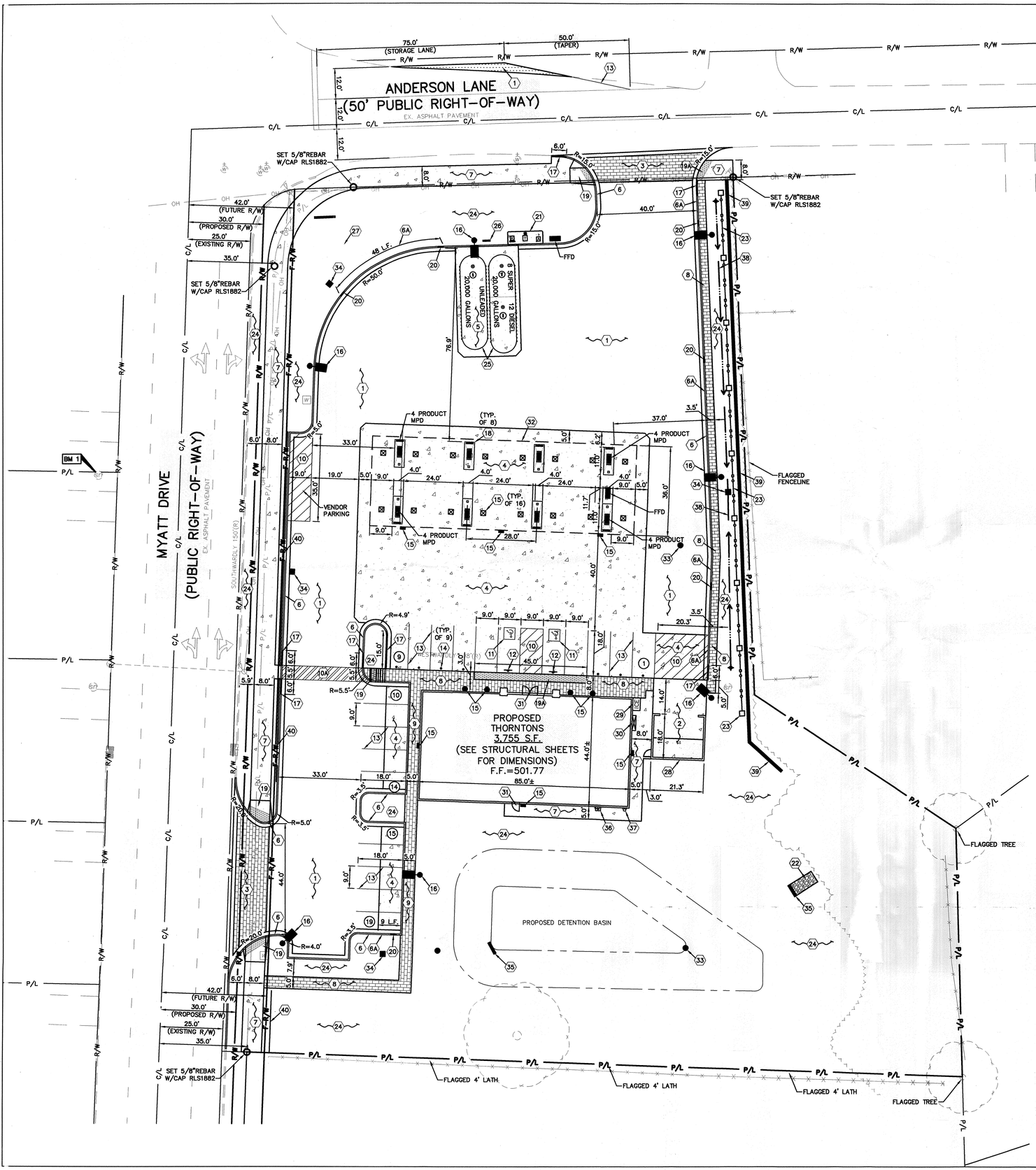

N

0 20 10 40

1"=20'
Horizontal
Scale in Feet

CONSTRUCTION NOTES

1. PROPOSED BITUMINOUS CONCRETE PAVEMENT PER DETAIL 1, SHEET C-501.
2. PROPOSED P.C.C. PAVEMENT PER DETAIL 2, SHEET C-501. APPLY LIQUID ASPHALT AT ALL JOINTS BETWEEN CONCRETE AND ASPHALT.
3. PROPOSED BRICK PAVEMENT PER DETAIL 3, SHEET C-501. APPLY LIQUID ASPHALT AT ALL JOINTS BETWEEN CONCRETE AND ASPHALT.
4. PROPOSED P.C.C. PAVEMENT PER DETAIL 4, SHEET C-501. APPLY LIQUID ASPHALT AT ALL JOINTS BETWEEN CONCRETE AND ASPHALT.
5. PROPOSED P.C.C. PAVEMENT PER DETAIL 5, SHEET C-501 (FOR AREA ABOVE UNDERGROUND STORAGE TANKS). APPLY LIQUID ASPHALT AT ALL JOINTS BETWEEN CONCRETE AND ASPHALT.
6. PROPOSED P.C.C. CURB & GUTTER PER DETAIL 6, SHEET C-501.

6A. PROPOSED FREESTANDING P.C.C. CURB & GUTTER PER DETAIL 6, SHEET C-501.

7. PROPOSED P.C.C. WALK PER DETAIL 7, SHEET C-501.
8. PROPOSED BRICK WALK PER DETAIL 8, SHEET C-501.
9. PROPOSED CURBED BRICK WALK PER DETAIL 9, SHEET C-501.
10. PROPOSED PAINTED TRANSVERSE STRIPING PER DETAIL 10, SHEET C-501.

10A. PROPOSED PAINTED CROSSWALK STRIPING PER DETAIL 10, SHEET C-501.

11. PROPOSED PAINTED INTERNATIONAL ADA SYMBOL PER ADA SPECIFICATIONS AND DETAIL 11, SHEET C-501.
12. PROPOSED ADA PARKING SIGN PER DETAIL 12, SHEET C-501.
13. PROPOSED PAINTED 4" WIDE SOLID STRIPE – WHITE W/ GLASS BEADS.
14. PROPOSED 4"ø STEEL BOLLARD W/ PLASTIC SLEEVE – RED PER DETAIL 14, SHEET C-501 (1 PER PARKING STALL ALONG BUILDING).
15. PROPOSED CANOPY/BUILDING MOUNTED LIGHTING FIXTURE. SEE ELECTRICAL DRAWINGS FOR SPECIFICATIONS.
16. PROPOSED LIGHT POLE AND FOUNDATION. SEE ELECTRICAL DRAWINGS AND DETAIL 16, SHEET C-501 FOR SPEDIFICATIONS.
17. TAPER PROPOSED CURB FROM 6" TO 0" (SEE PLAN FOR LENGTH OF TAPER).
18. PROPOSED PUMP ISLAND PER DETAIL, SHEET C-121.
19. PROPOSED ADA ACCESSIBLE RAMP PER ADA SPECIFICATIONS AND DETAIL 1, SHEET C-502.

19A. PROPOSED DETECTABLE WARNING SURFACE PER ADA SPECIFICATIONS AND DETAIL 1, SHEET C-502.

20. PROPOSED OPENING IN P.C.C. CURB & GUTTER PER DETAIL 2, SHEET C-502.
21. PROPOSED SERVICE ISLAND WITH AIR, LIGHT POLE AND LIGHT BASE FLUSH WITH ISLAND PER DETAIL 3, SHEET C-502.
22. PROPOSED ROCK CHANNEL PROTECTION PER DETAIL 4, SHEET C-502.
23. PROPOSED SCREEN FENCE PER DETAIL 6, SHEET C-502.
24. PROPOSED LANDSCAPING AREA. SOD ALL DISTURBED AREAS EXCEPT WHERE PLANTING BEDS ARE INDICATED. SEE SHEET L-101.
25. PROPOSED UNDERGROUND FUEL TANKS PER THORNTONS SPECIFICATIONS (TYP. OF 2).
26. PROPOSED VENTS FOR UNDERGROUND FUEL TANKS PER THORNTONS SPECIFICATIONS.
27. PROPOSED MONUMENT SIGN. FOUNDATION PER MANUFACTURER'S REQUIREMENTS.
28. PROPOSED TRASH ENCLOSURE, SEE ARCHITECTURAL DRAWINGS.
29. PROPOSED ICE CHEST, SEE ARCHITECTURAL DRAWINGS.
30. PROPOSED PROPANE TANK ENCLOSURE, SEE ARCHITECTURAL DRAWINGS.
31. PROPOSED FROST SLAB AT DOOR. SEE STRUCTURAL DRAWINGS.
32. PROPOSED CANOPY. SEE ARCHITECTURAL DRAWINGS.
33. PROPOSED MANHOLE PER TDOT SPECIFICATIONS AND DETAIL 8, SHEET C-502.
34. PROPOSED CATCH BASIN PER TDOT SPECIFICATIONS AND DETAIL 9, SHEET C-502.
35. PROPOSED HEADWALL PER TDOT SPECIFICATIONS AND DETAIL 15, SHEET C-502.
36. PROPOSED GAS METER PER GAS COMPANY SPECIFICATIONS. SEE ARCHITECTURAL DRAWINGS FOR EXACT LOCATION.
37. PROPOSED ELECTRIC METER PER ELECTRIC COMPANY SPECIFICATIONS. SEE ARCHITECTURAL DRAWINGS FOR EXACT LOCATION.
38. PROPOSED 2' WIDE GRASSED SWALE. SEE SHEET C-121 FOR GRADES.
39. PROPOSED RETAINING WALL PER DETAIL 11, SHEET C-503.
40. PROPOSED 2' HIGH MASONRY KNEE WALL. SEE DETAIL 7, SHEET L-501

LEGEND

(SEE SHEET C-001 FOR GENERAL LEGEND)

- (#) CONSTRUCTION NOTE
- (00) PROPOSED PARKING SPACE NUMBER
- — — — PROPOSED DETENTION BASIN

BUILDING SETBACKS

	REQUIRED	PROVIDED
FRONT: ANDERSON LANE	50'	201.1'
REAR: SOUTH	0'	103.0'
SIDE: MYATT DRIVE	50'	59.5'
SIDE: EAST	0'	53.6'

PARKING SETBACKS

	REQUIRED	PROVIDED
FRONT: ANDERSON LANE	0'	24.6'
REAR: SOUTH	0'	38.6'
SIDE: MYATT DRIVE	0'	8.0'
SIDE: EAST	0'	14.4'

LANDSCAPE SETBACKS

	REQUIRED	PROVIDED
FRONT: ANDERSON LANE	0'	24.6'
REAR: SOUTH	0'	38.6'
SIDE: MYATT DRIVE	0'	8.0'
SIDE: EAST	0'	14.4'

PARKING SPACES

	REQUIRED	PROVIDED
NUMBER OF SPACES	??	19

PARKING REQUIREMENTS
XXX SPACE PER XXXX
THEREFORE: XX/3,755=XX SPACES REQUIRED.

LAND USE DATA

	PERCENTAGE OF SITE AREA	AREA PROVIDED
BUILDING	????%	???? AC.
PAVEMENT/IMPERVIOUS	????%	???? AC.
LANDSCAPING	????%	???? AC.
TOTAL	100%	???? AC.

CURRENT ZONING: XXXX

MAP: 43-7
PARCEL: 69, 70

BENCHMARKS:

HORIZONTAL COORDINATES AND VERTICAL DATA, NAVD 88, BASED UPON AN OPUS SOLUTION NOVEMBER 7, 2007.

BENCHMARK #1 – TOP OF COVER OF A SANITARY SEWER MANHOLE LOCATED S 87°05'51 W, A DISTANCE OF 66.92 FEET FROM THE SOUTHWEST CORNER OF TRACT 2, LOT 32 ARCHWOOD ACRES SUBDIVISION SECTION 2.
ELEVATION=502.66

TENNESSEE ONE CALL SYSTEM, INC.

STOP–CALL BEFORE YOU DIGI
THREE FULL WORKING DAYS BEFORE YOU DIG, CALL

1–(800)–351–1111

REVISIONS

DATE	DESCRIPTION	BY
9/3/08	SUFFICIENCY REVIEW COMMENTS (RWR T20080090)	

REED B. GRANGER
STATE OF TENNESSEE

THORNTONS
1000 LAKE STATION ROAD, SUITE 200A, LOUISVILLE, KY. 40223 502-587-0002

MYATT DRIVE AND ANDERSON LANE
MADISON, TN

SITE PLAN

DRAFTING: D.J.H.
DESIGN: K.J.B.
DATE: 6-18-08
SCALE: 1"=20'

CLAUS PILE SCHOMER BURNS & DRAVEN INC.
GPD ASSOCIATES
320 South Main Street, Suite 2311 Akron, Ohio 44311
330-572-2100 / Fax 330-572-2101

PROJECT NO.
C-111

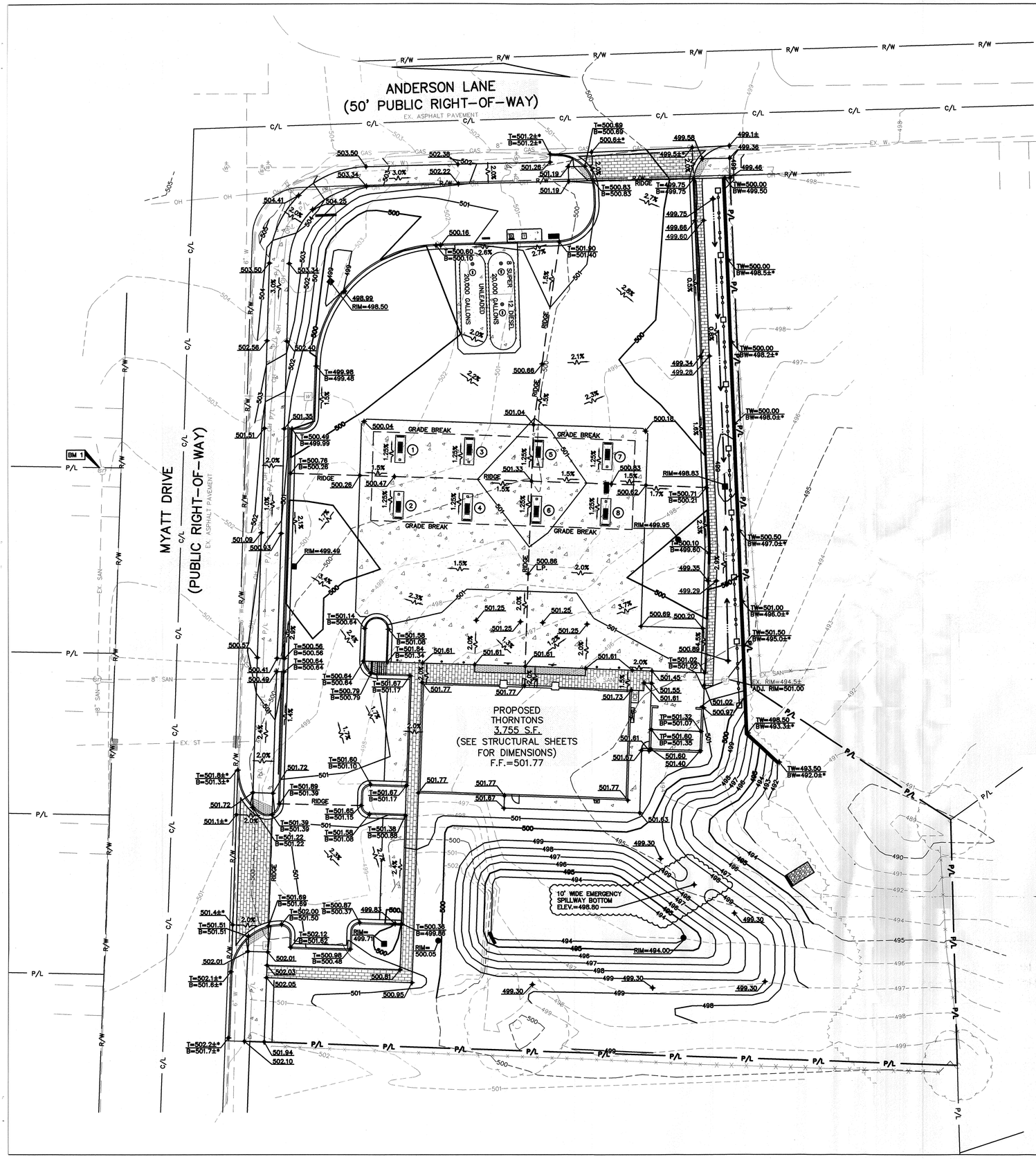

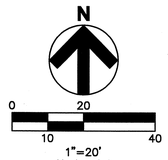

1"=20'
Horizontal
Scale in Feet

LEGEND

(SEE SHEET C-001 FOR GENERAL LEGEND)

000	PROPOSED CONTOUR
000.00	EXISTING SPOT ELEVATION
000.00	PROPOSED ELEVATION @ BOTTOM OF FRONT FACE AND/OR FINISHED PAVEMENT ELEVATION
T=000.00 B=000.00	TOP OF CURB ELEVATION BOTTOM OF CURB/FINISHED PAVEMENT ELEVATION
TP=000.00 BP=000.00	TOP OF DUMPSTER PAD ELEVATION BOTTOM OF DUMPSTER PAD/FINISHED PAVEMENT ELEVATION
000.0±*	MATCH EXISTING ELEVATION
0.0%	PROPOSED DRAINAGE SLOPE & DIRECTION
#	PROPOSED ELEVATION KEYNOTE

PUMP ISLAND ELEVATIONS

PUMP	ELEV. 1	ELEV. 2	ELEV. 3	ELEV. 4	ELEV. 5
1	500.46	500.40	500.26	500.32	500.76
2	500.46	500.40	500.26	500.32	500.76
3	500.90	500.84	500.70	500.76	501.20
4	500.90	500.84	500.70	500.76	501.20
5	501.20	501.26	501.12	501.06	501.56
6	501.20	501.26	501.12	501.06	501.56
7	500.82	500.76	500.68	500.62	501.12
8	500.82	500.76	500.68	500.62	501.12

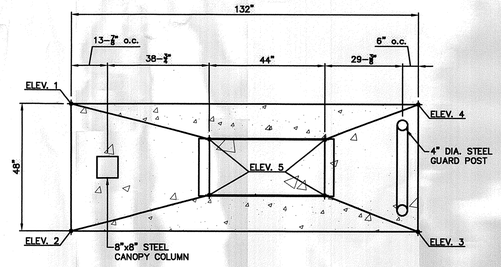

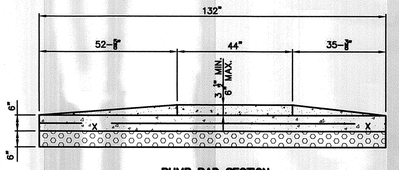

PUMP PAD SECTION

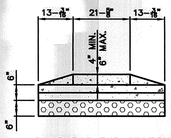

PUMP PAD END SECTION

PUMP ISLAND

THORNTONS STANDARD DETAIL

N.T.S.

BENCHMARKS:

HORIZONTAL COORDINATES AND VERTICAL DATA, NAVD 88, BASED UPON AN OPUS SOLUTION NOVEMBER 7, 2007.

BENCHMARK #1 – TOP OF COVER OF A SANITARY SEWER MANHOLE LOCATED S 87°05'51 W, A DISTANCE OF 66.92 FEET FROM THE SOUTHWEST CORNER OF TRACT 2, LOT 32 ARCHWOOD ACRES SUBDIVISION SECTION 2.
ELEVATION=502.66

TENNESSEE ONE CALL SYSTEM, INC.

STOP–CALL BEFORE YOU DIG!
THREE FULL WORKING DAYS BEFORE YOU DIG, CALL

1–(800)–351–1111

REVISIONS

DATE	DESCRIPTION	BY
10.2.08	SUFFICIENCY REVIEW COMMENTS SINCE 7.22.2008	

DAVID B. GRANGER
STATE OF TENNESSEE

THORNTONS
10201 LINN STATION ROAD, SUITE 200, LOUISVILLE, KY. 40223 502-426-9002

MYATT DRIVE AND ANDERSON LANE
MADISON, TN

GRADING PLAN

DRAFTING: D.J.H.
DESIGN: K.J.B.
DATE: 6-18-08
SCALE: 1"=20'

CLAUS PILE SCHOMER BURNS & DEWAYNE INC.
GPD ASSOCIATES
520 MARKET AVENUE, CANTON, OHIO 44711
330-372-2100, Fax 330-372-3101

PROJECT NO.
C-121

SWPPP NARRATIVE

THE EXISTING SITE IS LOCATED AT THE SOUTHEAST CORNER OF THE INTERSECTION OF MYATT DRIVE AND ANDERSON LANE WITHIN DAVIDSON COUNTY IN THE CITY OF MADISON. THE EXISTING SITE IS A 1.80 ACRE RESIDENTIAL PROPERTY AND GENERALLY DRAINS FROM THE WEST TO THE EAST TO A LOW SPOT ALONG THE EASTERN PROPERTY LINE. THE SITE HAS BEEN DESIGNED TO PRESERVE THE NATURAL LOW SPOT AS AN OUTLET POINT UTILIZING THE EXISTING FLOW RATES.

THE EXISTING SOILS ON SITE ARE MIMOSA-URBAN LAND COMPLEX WITH A TYPE C HYDROLOGIC SOIL GROUP. THE PREDEVELOPED SITE HAS A RUNOFF CURVE NUMBER OF 82. THE PROPOSED IMPROVEMENTS WILL INCREASE THE RUNOFF CURVE NUMBER TO 89.

THE PROPOSED LAYOUT WILL CONSIST OF A NEW 3,755 S.F. (0.086 ACRES) BUILDING, ALONG WITH 0.884 ACRES OF IMPERVIOUS PAVEMENT/SIDEWALK, 0.83 ACRES OF PERVIOUS LANDSCAPE AREAS. THE PROPOSED IMPROVEMENTS WILL INCLUDE:

- STRIPPING THE TOPSOIL AND REGRADING THE SITE.
- CONSTRUCTION OF A NEW BUILDING, FUEL PUMPS, CANOPY, AND PAVEMENT.
- UNDERGROUND STORM, SANITARY, WATER, ELECTRIC, TELEPHONE, AND GAS UTILITIES.
- STORMWATER DETENTION BASIN.
- CONSTRUCTION OF PUBLIC SIDEWALK IN THE PUBLIC RIGHT-OF-WAY.
- LANDSCAPING AND SEEDING OF LAWN AREAS.

THE PAVEMENT WILL BE SLOPED BETWEEN 1% AND 5% TO DRAIN INTO CATCH BASINS THROUGHOUT THE SITE. A STORMWATER BASIN WILL COLLECT, STORE AND RELEASE THE RUNOFF AT A RATE NOT TO EXCEED THE PREDEVELOPED CONDITIONS.

DURING CONSTRUCTION, THE SEDIMENT AND STORMWATER RUNOFF WILL BE CONTROLLED WITH SILT FENCE AROUND THE PERIMETER OF THE SITE. THE CATCH BASINS WILL BE PROTECTED WITH SILT FENCE INLET PROTECTION UNTIL THE STONE BASE AND PAVEMENTS CAN BE INSTALLED. A STONE CONSTRUCTION ENTRANCE WILL BE INSTALLED UPON MOBILIZATION ON SITE TO LIMIT THE TRACKING OF MUD AND SEDIMENT ONTO THE ADJACENT PAVEMENTS AND ROADWAYS. COVERED DUMPSTERS WILL BE ON SITE FOR DISPOSAL OF TRASH AND OTHER CONSTRUCTION DEBRIS. PAINT AND OTHER POTENTIALLY HAZARDOUS CHEMICALS WILL BE STORED INSIDE THE BUILDING OR OTHERWISE APPROVED WEATHERPROOF CONTAINER. THE CONTRACTOR PURCHASING THE MATERIALS WILL BE RESPONSIBLE FOR LEGALLY DISPOSING OF THE CONTAINERS AND EXCESS MATERIALS IN ACCORDANCE WITH THE MANUFACTURERS' RECOMMENDATIONS. WASHOUT AREAS WILL BE PROVIDED FOR THE CONCRETE TRUCKS AS REQUIRED.

IT IS THE CONTRACTOR'S RESPONSIBILITY DURING CONSTRUCTION TO MAINTAIN ALL SEDIMENTATION AND STORM WATER POLLUTION PREVENTION ITEMS AT ALL TIMES WHICH INCLUDES REGULAR REMOVAL AND DISPOSAL OF ACCUMULATED DEBRIS. ALL EROSION AND SEDIMENT CONTROLS MUST BE MAINTAINED PROPERLY UNTIL THE SITE IS STABILIZED. MAINTENANCE MUST INCLUDE INSPECTIONS OF ALL EROSION AND SEDIMENT CONTROLS AFTER EACH RUNOFF EVENT AND ON A WEEKLY BASIS. ALL PREVENTATIVE AND REMEDIAL MAINTENANCE WORK, INCLUDING CLEAN OUT, REPAIR, REPLACEMENT, RE-GRADING, RESEEDING, RE-MULCHING AND RE-NETTING MUST BE PERFORMED IMMEDIATELY. THE DEVELOPER WILL OWN AND MAINTAIN THE SITE THROUGHOUT AND AFTER CONSTRUCTION HAS BEEN COMPLETED.

THE STORMWATER MANAGEMENT CALCULATIONS FOR THE PROPOSED THORNTONS SITE HAVE BEEN PROVIDED IN THE STORMWATER MANAGEMENT REPORT SUMMARY.

STORM WATER POLLUTION PREVENTION NOTES

1. ALL WORK SPECIFIED AS A TDOT ITEM SHALL BE GOVERNED BY THE CURRENT STATE OF TENNESSEE DEPARTMENT OF TRANSPORTATION CONSTRUCTION AND MATERIAL SPECIFICATION HANDBOOK. IT IS THE CONTRACTOR'S RESPONSIBILITY TO POSSESS AND TO BE FAMILIAR WITH APPLICABLE SECTIONS.
2. THIS CONTRACT DRAWING SHALL BE MADE AVAILABLE ON SITE AT ALL TIMES AND PRESENTED UPON REQUEST. IF UNFORESEEN STORM WATER POLLUTION PREVENTION IS ENCOUNTERED, ADDITIONAL STORM WATER POLLUTION PREVENTION (SWPP) MEASURES MAY BE REQUESTED BY THE OWNER, COUNTY ENGINEER, PROJECT ENGINEER OR SOIL CONSERVATION SERVICE REPRESENTATIVE AT ANYTIME. SUCH REQUESTS SHALL BE IMPLEMENTED IMMEDIATELY AT CONTRACTOR'S EXPENSE.
3. ALL STORM WATER POLLUTION PREVENTION ITEMS SHALL BE INSTALLED AS SHOWN OR NOTED ON THIS SHEET.
4. PLANT TEMPORARY SEEDING AND MULCHING IN ALL AREAS THAT SHALL BE INACTIVE FOR 21 DAYS OR MORE. ALL DISTURBED AND ERODED EARTH SHALL BE REGRADED AND SEEDED WITHIN 7 DAYS WITH SEEDING, AS DEFINED ABOVE AND AS SHOWN ON THE TABLE BELOW, TO ESTABLISH STABILITY AND PROVIDE SEDIMENT CONTROL. WHERE POSSIBLE, TEMPORARY SEEDING GROWTH SHALL NOT BE MOWED UNTIL IT HAS GONE TO SEED FOR 1 YEAR.

TEMPORARY SEEDING SPECIFICATIONS:

SEEDING DATES	SEED TYPE	APPLICATION RATE PER 1,000 S.F.
MARCH 1 – AUGUST 15	OATS PERENNIAL RYE GRASS OR TALL FESCUE	3# 1#
AUGUST 16 – NOVEMBER 1	RYE, WHEAT OR PERENNIAL RYE GRASS TALL FESCUE	 3# 1#
AFTER NOVEMBER 1	STRAW OR HAY MULCH	2–3 BALES
SEED BED PREPARATION	LIME 10–10–10 OR 12–12–12 FERTILIZER	100# 12–15#

5. PERMANENT VEGETATION SHALL BE INSTALLED WITHIN 7 DAYS AT THE COMPLETION OF ANY GRADED AREAS, WEATHER PERMITTING.
6. AT SUCH TIME ROUGH GRADING OF THE SITE IS COMPLETE AND DRAINAGE DIVERTS TO INLETS, INLET SEDIMENT FILTERS SHALL BE INSTALLED AT ALL INLET STRUCTURES TO KEEP PIPING SYSTEMS FREE OF SILTATION.
7. SILT BARRIERS SHALL BE INSTALLED AROUND ALL EXISTING OR NEW STORM INLETS, CATCH BASINS, YARD DRAINS. INSTALL ROCK CHECK DAMS FOR HEADWALL INLETS FOR STORM WATER POLLUTION PREVENTION.
8. STORM WATER POLLUTION PREVENTION MEASURES SHALL BE INSTALLED AROUND ALL DIRT OR TOPSOIL STOCKPILES AND OTHER TEMPORARILY DISTURBED AREAS AS SHOWN ON THESE PLANS AND AS DIRECTED BY THE ENGINEER.
9. CONTRACTOR SHALL INSPECT ALL SWPP MEASURES DAILY AND REPAIR AS NECESSARY TO PREVENT EROSION. SILTATION SHALL BE REMOVED FROM AREAS WHERE FAILURES HAVE OCCURRED AND CORRECTIVE ACTION TAKEN WITHIN 24 HOURS TO MAINTAIN ALL SWPP.
10. SILT BARRIERS, CONSTRUCTION ENTRANCES, AND SILT FENCES SHALL REMAIN IN PLACE UNTIL A GOOD STAND OF GRASS HAS BEEN OBTAINED AND/OR PAVING OPERATIONS ARE COMPLETE. CONTRACTOR SHALL KEEP SILT FROM ENTERING ANY STORM DRAINAGE SYSTEM. ONCE SITE HAS BEEN COMPLETELY STABILIZED, ANY SILT IN PIPES AND DRAINAGE SWALES SHALL BE REMOVED WITHIN 10 DAYS.
11. TEMPORARY SEDIMENTATION AND STORM WATER POLLUTION PREVENTION MEASURES MUST BE INSPECTED AND LOGGED BY THE CONTRACTOR FOR INSPECTION, LOGGING SHALL BE WEEKLY AND AFTER RAIN STORMS.
12. UTILITY COMPANIES MUST COMPLY WITH ALL STORM WATER POLLUTION PREVENTION MEASURES AS DEFINED ON THE STORM WATER POLLUTION PREVENTION PLANS, DETAILS AND NOTES.
13. THE TOTAL AREA OF DISTURBANCE FOR THIS PROJECT IS 1.80 ACRES.
14. ALL EXISTING WATER COURSES WITHIN THE PROJECT LIMITS SHALL BE TEMPORARILY PROTECTED DURING LAND CLEARING AND GRADING OPERATIONS. SOILS WITHIN 50 FEET OF SAID WATER COURSES SHALL BE STABILIZED WITHIN 2 DAYS OF THE INITIAL CLEARING / GRADING OPERATION AS SHOWN ON PLANS.
15. IT IS THE CONTRACTOR'S RESPONSIBILITY TO MAINTAIN ALL SEDIMENTATION AND STORM WATER POLLUTION PREVENTION ITEMS AT ALL TIMES.
16. ALL STORM WATER POLLUTION PREVENTION PRACTICES WILL BE INSTALLED BEFORE ANY OTHER EARTH MOVING OCCURS.
17. THE FOLLOWING STORM WATER POLLUTION PREVENTION AND SEDIMENT CONTROL MEASURES WILL BE USED ON THIS SITE:
    17.A. SILT FENCE
    17.B. SILT BARRIERS
    17.C. CONSTRUCTION ENTRANCE
    17.D. CONCRETE WASHOUT FACILITY

CONSTRUCTION SEQUENCE

1. STAKE AND/OR FLAG LIMITS OF CLEARING.
2. DURING PRECONSTRUCTION MEETING ALL EROSION & SEDIMENT CONTROL FACILITIES & PROCEDURES SHALL BE DISCUSSED.
3. CLEARING & GRUBBING, AS NECESSARY, FOR INSTALLATION OF PERIMETER CONTROLS.
4. INSTALL SILT FENCE PERIMETER CONTROLS AS SHOWN ON PLANS.
5. INSTALL CONSTRUCTION ENTRANCE AND CONCRETE WASHOUT FACILITY, IF CONDITIONS ARE SUCH THAT MUD IS COLLECTING ON VEHICLE TIRES, THE TIRES MUST BE CLEANED BEFORE THE VEHICLES ENTER THE PUBLIC ROADWAY. THE SITE ENTRANCE SHALL BE MAINTAINED IN A CONDITION THAT WILL PREVENT THE TRACKING OR FLOW OF MUD ONTO THE PUBLIC RIGHT-OF-WAY. ALL MATERIALS SPILLED, DROPPED, WASHED OR TRACKED FROM VEHICLES ONTO THE ROADWAY MUST BE REMOVED PROMPTLY.
6. CLEARING & GRUBBING THE REMAINING SITE AS NECESSARY.
7. BEGIN FILLING & GRADING AS REQUIRED TO REACH SUBGRADE.

CONTRACTOR TO REFER TO THE FOLLOWING MWS STANDARD DETAILS:
TCP-13
TCP-03
TCP-01
TCP-05
TCP-24

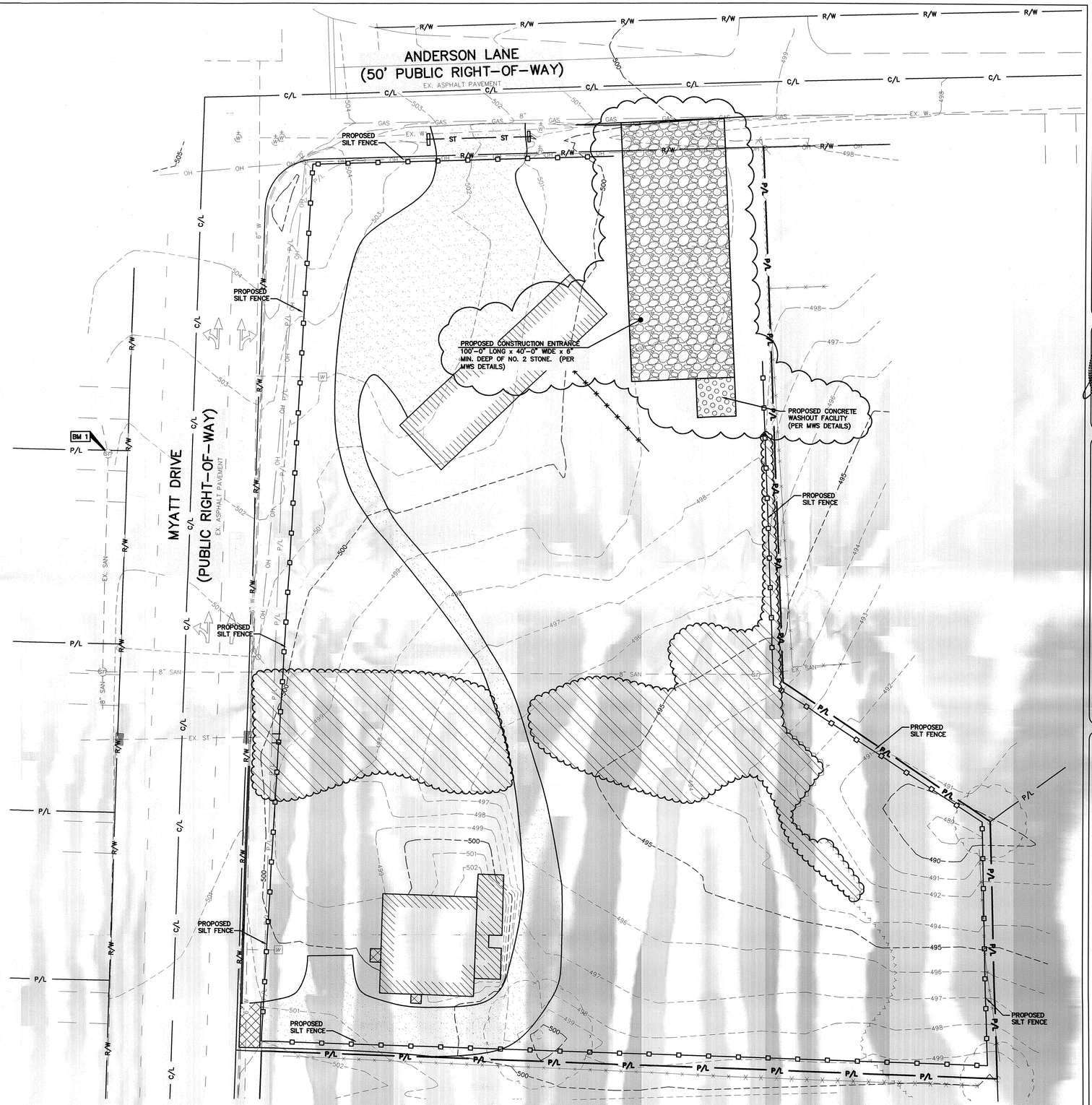

N

PLAN VIEW

LEGEND
(SEE SHEET C-001 FOR GENERAL LEGEND)

- PROPOSED SILT BARRIER
- PROPOSED SILT FENCE
- PROPOSED CONSTRUCTION ENTRANCE

ERIC ZOPH
VP OF CONSTRUCTION AND ENVIRONMENTAL CONCERNS
THORNTONS INC.

DATE

REVISIONS

DATE	DESCRIPTION	BY
10.22.08	SUFFICIENCY REVIEW COMMENTS (MWS# T2008000080)	

DAVID B. GRANGER
STATE OF TENNESSEE

THORNTONS
10201 LAKE STATION ROAD, SUITE 200, LOUISVILLE, KY. 40223 502-426-8222

MYATT DRIVE AND ANDERSON LANE
MADISON, TN

SWPP PLAN

DRAFTING: D.J.H.
DATE: 6-18-08
DESIGN: K.J.B.
SCALE: 1"=20'

GLAUS PYLE SCHOMER BURNS & DEHAVEN INC.
GPD ASSOCIATES
320 South Main Street, Suite 2331 Akron, Ohio 44311
330.572.2100 | Fax 330.572.2101

PROJECT NO.
C-131

SWPPP NARRATIVE

THE EXISTING SITE IS LOCATED AT THE SOUTHEAST CORNER OF THE INTERSECTION OF MYATT DRIVE AND ANDERSON LANE WITHIN DAVIDSON COUNTY IN THE CITY OF MADISON. THE EXISTING SITE IS A 1.80 ACRE RESIDENTIAL PROPERTY AND GENERALLY DRAINS FROM THE WEST TO THE EAST TO A LOW SPOT ALONG THE EASTERN PROPERTY LINE. THE SITE HAS BEEN DESIGNED TO PRESERVE THE NATURAL LOW SPOT AS AN OUTLET POINT UTILIZING THE EXISTING FLOW RATES.

THE EXISTING SOILS ON SITE ARE MIMOSA-URBAN LAND COMPLEX WITH A TYPE C HYDROLOGIC SOIL GROUP. THE PREDEVELOPED SITE HAS A RUNOFF CURVE NUMBER OF 82. THE PROPOSED IMPROVEMENTS WILL INCREASE THE RUNOFF CURVE NUMBER TO 89.

THE PROPOSED LAYOUT WILL CONSIST OF A NEW 3,755 S.F. (0.086 ACRES) BUILDING, ALONG WITH 0.884 ACRES OF IMPERVIOUS PAVEMENT/SIDEWALK, 0.83 ACRES OF PERVIOUS LANDSCAPE AREAS. THE PROPOSED IMPROVEMENTS WILL INCLUDE:

- STRIPPING THE TOPSOIL AND REGRADING THE SITE.
- CONSTRUCTION OF A NEW BUILDING, FUEL PUMPS, CANOPY, AND PAVEMENT.
- UNDERGROUND STORM, SANITARY, WATER, ELECTRIC, TELEPHONE, AND GAS UTILITIES.
- STORMWATER DETENTION BASIN.
- CONSTRUCTION OF PUBLIC SIDEWALK IN THE PUBLIC RIGHT-OF-WAY.
- LANDSCAPING AND SEEDING OF LAWN AREAS.

THE PAVEMENT WILL BE SLOPED BETWEEN 1% AND 5% TO DRAIN INTO CATCH BASINS THROUGHOUT THE SITE. A STORMWATER BASIN WILL COLLECT, STORE AND RELEASE THE RUNOFF AT A RATE NOT TO EXCEED THE PREDEVELOPED CONDITIONS.

DURING CONSTRUCTION, THE SEDIMENT AND STORMWATER RUNOFF WILL BE CONTROLLED WITH SILT FENCE AROUND THE PERIMETER OF THE SITE. THE CATCH BASINS WILL BE PROTECTED WITH SILT FENCE INLET PROTECTION UNTIL THE STONE BASE AND PAVEMENTS CAN BE INSTALLED. A STONE CONSTRUCTION ENTRANCE WILL BE INSTALLED UPON MOBILIZATION ON SITE TO LIMIT THE TRACKING OF MUD AND SEDIMENT ONTO THE ADJACENT PAVEMENTS AND ROADWAYS. COVERED DUMPSTERS WILL BE ON SITE FOR DISPOSAL OF TRASH AND OTHER CONSTRUCTION DEBRIS. PAINT AND OTHER POTENTIALLY HAZARDOUS CHEMICALS WILL BE STORED INSIDE THE BUILDING OR OTHERWISE APPROVED WEATHERPROOF CONTAINER. THE CONTRACTOR PURCHASING THE MATERIALS WILL BE RESPONSIBLE FOR LEGALLY DISPOSING OF THE CONTAINERS AND EXCESS MATERIALS IN ACCORDANCE WITH THE MANUFACTURERS' RECOMMENDATIONS. WASHOUT AREAS WILL BE PROVIDED FOR THE CONCRETE TRUCKS AS REQUIRED.

IT IS THE CONTRACTOR'S RESPONSIBILITY DURING CONSTRUCTION TO MAINTAIN ALL SEDIMENTATION AND STORM WATER POLLUTION PREVENTION ITEMS AT ALL TIMES WHICH INCLUDES REGULAR REMOVAL AND DISPOSAL OF ACCUMULATED DEBRIS. ALL EROSION AND SEDIMENT CONTROLS MUST BE MAINTAINED PROPERLY UNTIL THE SITE IS STABILIZED. MAINTENANCE MUST INCLUDE INSPECTIONS OF ALL EROSION AND SEDIMENT CONTROLS AFTER EACH RUNOFF EVENT AND ON A WEEKLY BASIS. ALL PREVENTATIVE AND REMEDIAL MAINTENANCE WORK, INCLUDING CLEAN OUT, REPAIR, REPLACEMENT, RE-GRADING, RESEEDING, RE-MULCHING AND RE-NETTING MUST BE PERFORMED IMMEDIATELY. THE DEVELOPER WILL OWN AND MAINTAIN THE SITE THROUGHOUT AND AFTER CONSTRUCTION HAS BEEN COMPLETED.

THE STORMWATER MANAGEMENT CALCULATIONS FOR THE PROPOSED THORNTONS SITE HAVE BEEN PROVIDED IN THE STORMWATER MANAGEMENT REPORT SUMMARY.

STORM WATER POLLUTION PREVENTION NOTES

1. ALL WORK SPECIFIED AS A TDOT ITEM SHALL BE GOVERNED BY THE CURRENT STATE OF TENNESSEE DEPARTMENT OF TRANSPORTATION CONSTRUCTION AND MATERIAL SPECIFICATION HANDBOOK. IT IS THE CONTRACTOR'S RESPONSIBILITY TO POSSESS AND TO BE FAMILIAR WITH APPLICABLE SECTIONS.
2. THIS CONTRACT DRAWING SHALL BE MADE AVAILABLE ON SITE AT ALL TIMES AND PRESENTED UPON REQUEST. IF UNFORESEEN STORM WATER POLLUTION PREVENTION IS ENCOUNTERED, ADDITIONAL STORM WATER POLLUTION PREVENTION (SWPP) MEASURES MAY BE REQUESTED BY THE OWNER, COUNTY ENGINEER, PROJECT ENGINEER OR SOIL CONSERVATION SERVICE REPRESENTATIVE AT ANYTIME. SUCH REQUESTS SHALL BE IMPLEMENTED IMMEDIATELY AT CONTRACTOR'S EXPENSE.
3. ALL STORM WATER POLLUTION PREVENTION ITEMS SHALL BE INSTALLED AS SHOWN OR NOTED ON THIS SHEET.
4. PLANT TEMPORARY SEEDING AND MULCHING IN ALL AREAS THAT SHALL BE INACTIVE FOR 21 DAYS OR MORE. ALL DISTURBED AND ERODED EARTH SHALL BE REGRADED AND SEEDED WITHIN 7 DAYS WITH SEEDING, AS DEFINED ABOVE AND AS SHOWN ON THE TABLE BELOW, TO ESTABLISH STABILITY AND PROVIDE SEDIMENT CONTROL. WHERE POSSIBLE, TEMPORARY SEEDING GROWTH SHALL NOT BE MOWED UNTIL IT HAS GONE TO SEED FOR 1 YEAR.

TEMPORARY SEEDING SPECIFICATIONS:

SEEDING DATES	SEED TYPE	APPLICATION RATE PER 1,000 S.F.
MARCH 1 – AUGUST 15	OATS PERENNIAL RYE GRASS OR TALL FESCUE	3# 1#
AUGUST 16 – NOVEMBER 1	RYE, WHEAT OR PERENNIAL RYE GRASS TALL FESCUE	3# 1#
AFTER NOVEMBER 1	STRAW OR HAY MULCH	2–3 BALES
SEED BED PREPARATION	LIME 10–10–10 OR 12–12–12 FERTILIZER	100# 12–15#

5. PERMANENT VEGETATION SHALL BE INSTALLED WITHIN 7 DAYS AT THE COMPLETION OF ANY GRADED AREAS, WEATHER PERMITTING.
6. AT SUCH TIME ROUGH GRADING OF THE SITE IS COMPLETE AND DRAINAGE DIVERTS TO INLETS, INLET SEDIMENT FILTERS SHALL BE INSTALLED AT ALL INLET STRUCTURES TO KEEP PIPING SYSTEMS FREE OF SILTATION.
7. SILT BARRIERS SHALL BE INSTALLED AROUND ALL EXISTING OR NEW STORM INLETS, CATCH BASINS, YARD DRAINS. INSTALL ROCK CHECK DAMS FOR HEADWALL INLETS FOR STORM WATER POLLUTION PREVENTION.
8. STORM WATER POLLUTION PREVENTION MEASURES SHALL BE INSTALLED AROUND ALL DIRT OR TOPSOIL STOCKPILES AND OTHER TEMPORARILY DISTURBED AREAS AS SHOWN ON THESE PLANS AND AS DIRECTED BY THE ENGINEER.
9. CONTRACTOR SHALL INSPECT ALL SWPP MEASURES DAILY AND REPAIR AS NECESSARY TO PREVENT EROSION. SILTATION SHALL BE REMOVED FROM AREAS WHERE FAILURES HAVE OCCURRED AND CORRECTIVE ACTION TAKEN WITHIN 24 HOURS TO MAINTAIN ALL SWPP.
10. SILT BARRIERS, CONSTRUCTION ENTRANCES, AND SILT FENCES SHALL REMAIN IN PLACE UNTIL A GOOD STAND OF GRASS HAS BEEN OBTAINED AND/OR PAVING OPERATIONS ARE COMPLETE. CONTRACTOR SHALL KEEP SILT FROM ENTERING ANY STORM DRAINAGE SYSTEM. ONCE SITE HAS BEEN COMPLETELY STABILIZED, ANY SILT IN PIPES AND DRAINAGE SWALES SHALL BE REMOVED WITHIN 10 DAYS.
11. TEMPORARY SEDIMENTATION AND STORM WATER POLLUTION PREVENTION MEASURES MUST BE INSPECTED AND LOGGED BY THE CONTRACTOR FOR INSPECTION, LOGGING SHALL BE WEEKLY AND AFTER RAIN STORMS.
12. UTILITY COMPANIES MUST COMPLY WITH ALL STORM WATER POLLUTION PREVENTION MEASURES AS DEFINED ON THE STORM WATER POLLUTION PREVENTION PLANS, DETAILS AND NOTES.
13. THE TOTAL AREA OF DISTURBANCE FOR THIS PROJECT IS 1.80 ACRES.
14. ALL EXISTING WATER COURSES WITHIN THE PROJECT LIMITS SHALL BE TEMPORARILY PROTECTED DURING LAND CLEARING AND GRADING OPERATIONS. SOILS WITHIN 50 FEET OF SAID WATER COURSES SHALL BE STABILIZED WITHIN 2 DAYS OF THE INITIAL CLEARING / GRADING OPERATION AS SHOWN ON PLANS.
15. IT IS THE CONTRACTOR'S RESPONSIBILITY TO MAINTAIN ALL SEDIMENTATION AND STORM WATER POLLUTION PREVENTION ITEMS AT ALL TIMES.
16. ALL STORM WATER POLLUTION PREVENTION PRACTICES WILL BE INSTALLED BEFORE ANY OTHER EARTH MOVING OCCURS.
17. THE FOLLOWING STORM WATER POLLUTION PREVENTION AND SEDIMENT CONTROL MEASURES WILL BE USED ON THIS SITE:
    - 17.A. SILT FENCE
    - 17.B. SILT BARRIERS
    - 17.C. CONSTRUCTION ENTRANCE
    - 17.D. CONCRETE WASHOUT FACILITY

CONSTRUCTION SEQUENCE

1. CONSTRUCT AND MAINTAIN TEMPORARY DRAINAGE SWALE DURING FILLING & GRADING ACTIVITIES.
2. CONSTRUCT SITE WORK INCLUDING STORM DRAINAGE FACILITIES.
3. UPON INSTALLATION OF STORM DRAINAGE CATCH BASINS, INSTALL INLET PROTECTION.
4. MAINTAIN EROSION & SEDIMENTATION CONTROL MEASURES UNTIL THE SITE HAS BEEN COMPLETELY STABILIZED.
5. REMOVE SEDIMENT CONTROLS.

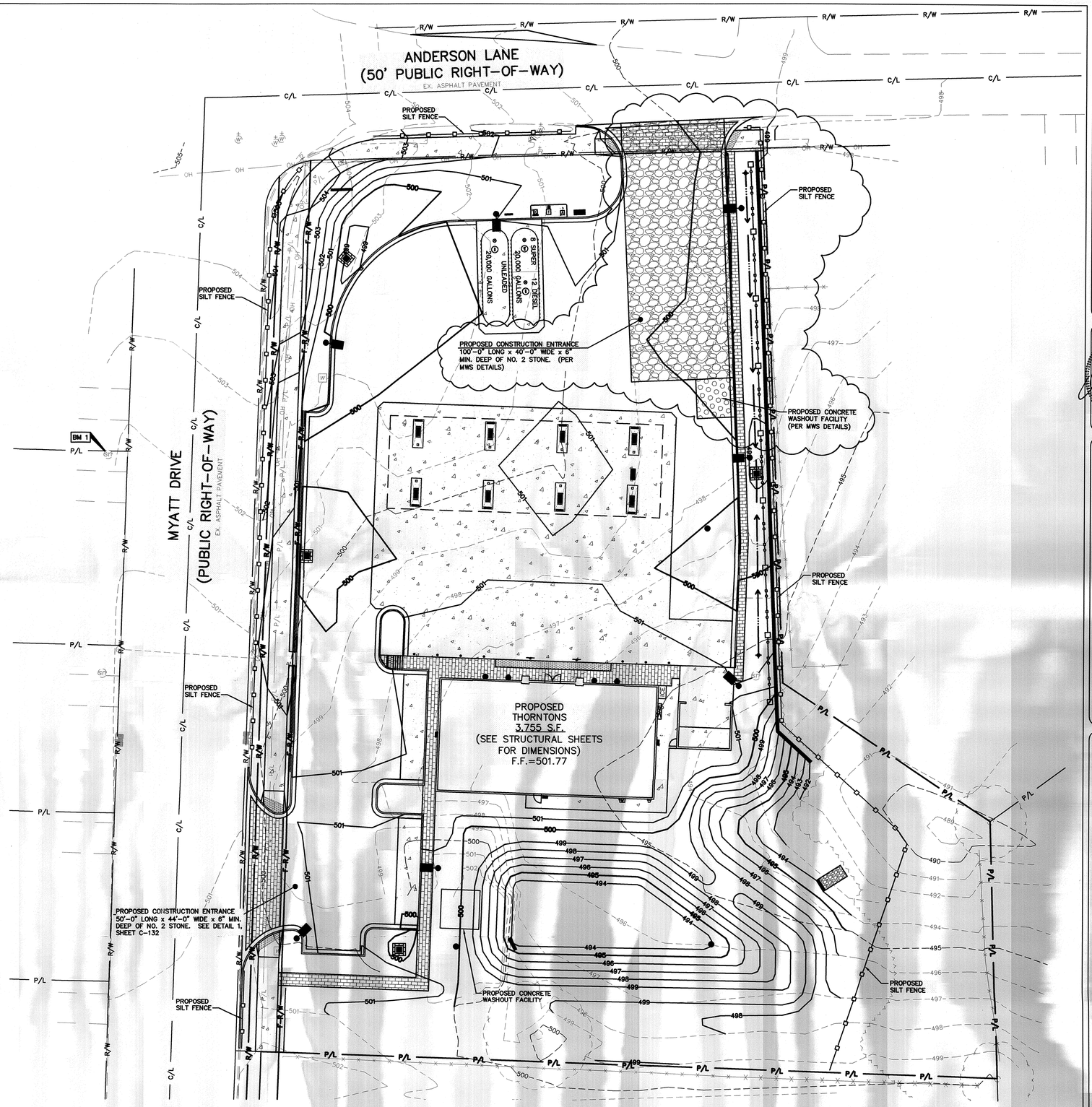

*NOTE: CONTRACTOR SHALL PROVIDE AN AREA FOR TRUCK WASH AND EQUIPMENT FUELING IN ACCORDANCE WITH METRO CP-10 AND CP-13, RESPECTIVELY. CONTRACTOR SHALL COORDINATE EXACT LOCATION WITH NPDES DEPARTMENT DURING PRECONSTRUCTION MEETING.

ERIC ZOPH
VP OF CONSTRUCTION AND ENVIRONMENTAL CONCERNS
THORNTONS INC.

DATE

CONTRACTOR TO REFER TO THE FOLLOWING MWS STANDARD DETAILS:
TCP-13
TCP-03
TCP-01
TCP-05
TCP-24

PLAN VIEW

N

LEGEND
(SEE SHEET C-001 FOR GENERAL LEGEND)

PROPOSED SILT BARRIER
PROPOSED SILT FENCE
PROPOSED CONSTRUCTION ENTRANCE

REVISIONS

DATE	DESCRIPTION	BY
10.2.08	SUFFICIENCY REVIEW COMMENTS (MWS T2008000080)	

DAVID B. GRANGER
STATE OF TENNESSEE

THORNTONS
10301 LAKE STATION ROAD, SUITE 200, LOUISVILLE, KY. 40299 502-495-9002

MYATT DRIVE AND ANDERSON LANE
MADISON, TN

SWPP PLAN

DRAFTING: D.J.H.
DATE: 6-18-08
DESIGN: K.J.B.
SCALE: 1"=20'

CLAUS PYLE SCHOMER BURNS & DEWAYNE INC.
GPD ASSOCIATES
3935 Smith Road, Suite 231 Akron, Ohio 44333
330-572-2100 Fax 330-572-2101

PROJECT NO.
C-132

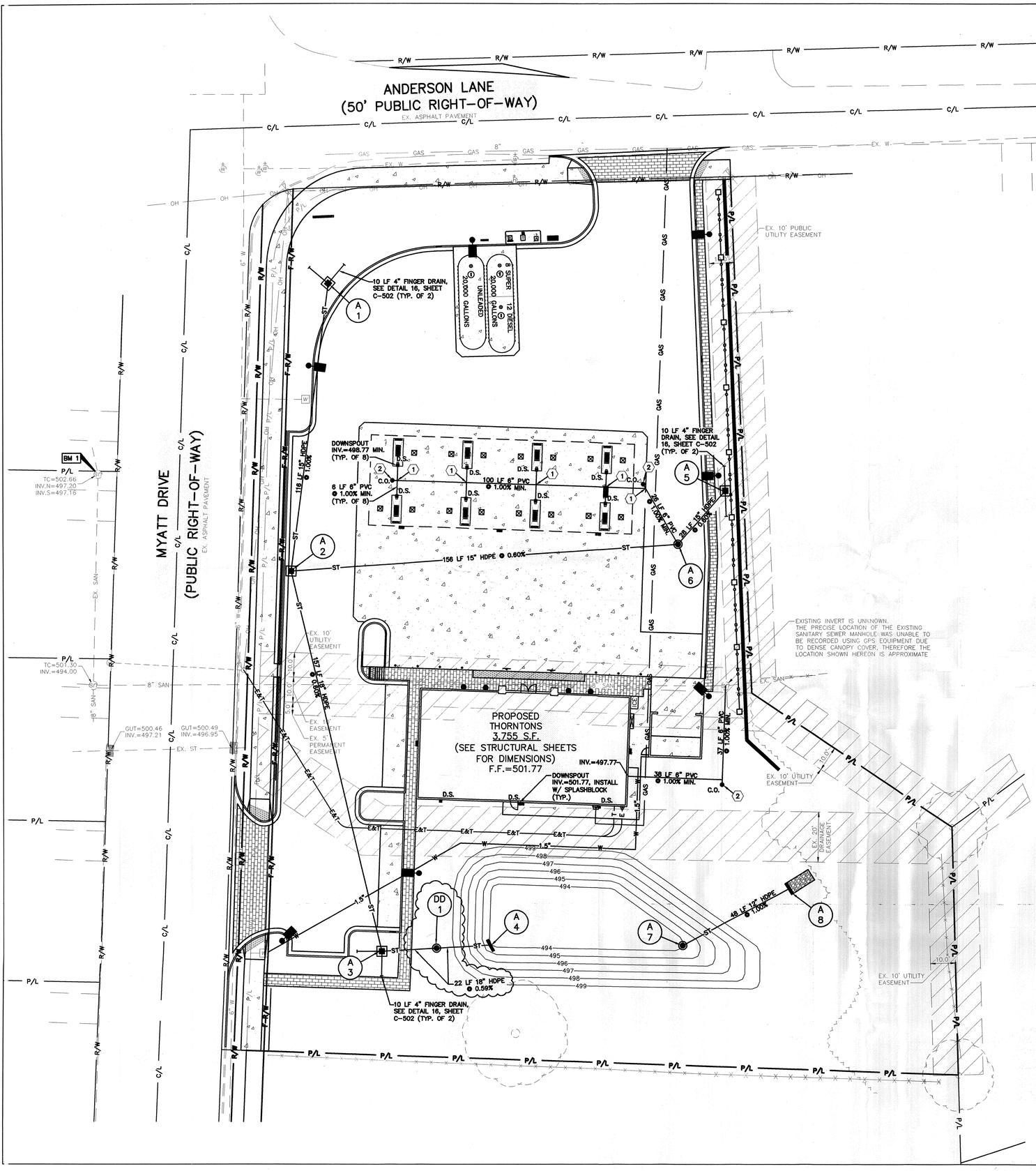

N

0 20
10 40
1"=20'
Horizontal
Scale in Feet

LEGEND

(SEE SHEET C-001 FOR GENERAL LEGEND)

—ST—	PROPOSED STORM SEWER
—SAN—	PROPOSED SANITARY SEWER
—W—	PROPOSED WATER SERVICE
—GAS—	PROPOSED GAS SERVICE
—E&T—	PROPOSED UNDERGROUND ELECTRIC & TELEPHONE SERVICE
D.S. ■	PROPOSED DOWNSPOUT
C.O. ●	PROPOSED CLEAN OUT
A #	APPURTENANCES
#	UTILITY CONSTRUCTION NOTE
—DD—	PROPOSED DETENTION BASIN

UTILITY STRUCTURES

A 1 PROPOSED CATCH BASIN (SEE DETAIL 9, SHEET C-502)
RIM=496.99
INV. 15" (SW)=496.61
INV. 4" (NE/NW)=496.66

A 2 PROPOSED CATCH BASIN (SEE DETAIL 9, SHEET C-502)
RIM=499.99
INV. 15" (N/E)=495.45
INV. 18" (SE)=495.20

A 3 PROPOSED CATCH BASIN (SEE DETAIL 9, SHEET C-502)
RIM=499.71
INV. 18" (NW/E)=494.26

A 4 PROPOSED HEADWALL (SEE DETAIL 15, SHEET C-502)
TOP=
INV. 18" (W)=494.00
INV. 4" (W/S)=495.10

A 5 PROPOSED CATCH BASIN (SEE DETAIL 9, SHEET C-502)
RIM=498.83
INV. 15" (SW)=496.56
INV. 4" (N/S)=496.50

A 6 PROPOSED STORM MANHOLE (SEE DETAIL 8, SHEET C-502)
RIM=499.95
INV. 15" (SW/NE)=496.39

A 7 PROPOSED STORM MANHOLE (SEE DETAIL 8, SHEET C-502)
RIM=496.15
INV. 15" (E)=494.00
INV. 6" ORIFICE (W)=494.00

A 8 PROPOSED HEADWALL (SEE DETAIL 15, SHEET C-502)
TOP=
INV. 15" (SW)=493.52

DD 1 PROPOSED 6'ø HYDRO INTERNATIONAL DOWNSTREAM DEFENDER (SEE DETAIL 4, SHEET C-503)
RIM=500.05
INV. 18" (W/E)=494.13

(1) WYE CONNECTION, SEE DETAIL 1, SHEET C-503.

(2) CLEANOUT, SEE DETAIL 2, SHEET C-503.

BENCHMARKS:

HORIZONTAL COORDINATES AND VERTICAL DATA, NAVD 88, BASED UPON AN OPUS SOLUTION NOVEMBER 7, 2007.

BENCHMARK #1 – TOP OF COVER OF A SANITARY SEWER MANHOLE LOCATED S 87°05'51 W, A DISTANCE OF 66.92 FEET FROM THE SOUTHWEST CORNER OF TRACT 2, LOT 32 ARCHWOOD ACRES SUBDIVISION SECTION 2.
ELEVATION=502.66

TENNESSEE ONE CALL SYSTEM, INC.

STOP–CALL BEFORE YOU DIG!
THREE FULL WORKING DAYS BEFORE YOU DIG, CALL

1–(800)–351–1111

REVISIONS

DATE	DESCRIPTION	BY
10.2.08	SUFFICIENCY REVIEW COMMENTS PRIOR TO DEVELOPMENT	

DAVID B. GRANGER
STATE OF TENNESSEE

THORNTONS
10301 LINN STATION ROAD, SUITE 500, LOUISVILLE, KY. 40223 502-426-2822

MYATT DRIVE AND ANDERSON LANE
MADISON, TN

UTILITY PLAN

DRAFTING: D.J.H.
DATE: 6-18-08
DESIGN: K.J.B.
SCALE: 1"=20'

CLAUS PYLE SCHOMER BURNS & DEWATER INC.
GPD ASSOCIATES
320 South Main Street, Suite 231 Akron, Ohio 44311
330-972-2100 / Fax 330-972-2101

PROJECT NO.
C-141

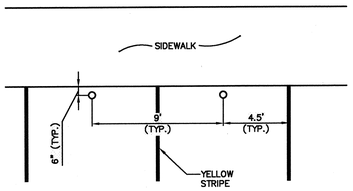

PLAN

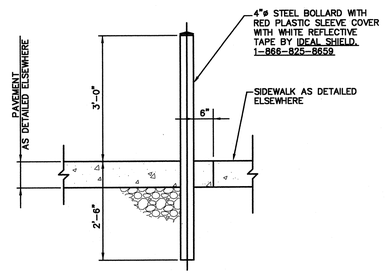

4"ø BOLLARD

N.T.S.

14

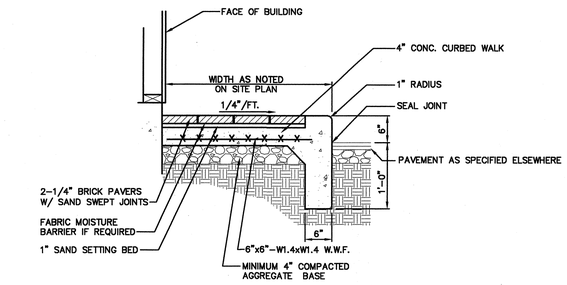

NOTES:

1. CONTRACTOR SHALL INSTALL 1/2" PRE-FORMED EXPANSION JOINT MATERIAL AND JOINT SEALER WHERE PAVEMENT ABUTS BUILDING.

P.C.C. CURBED BRICK WALK

N.T.S.

9

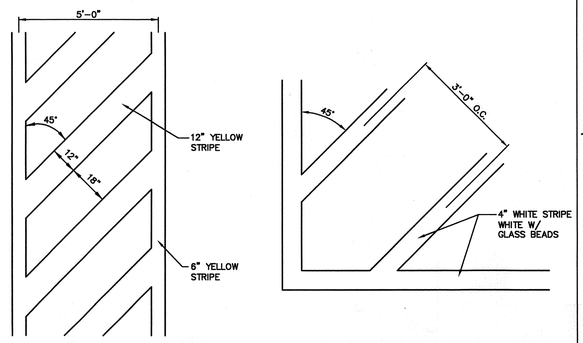

CROSSWALK STRIPING

TRANSVERSE STRIPING

PAVEMENT STRIPING

N.T.S.

10

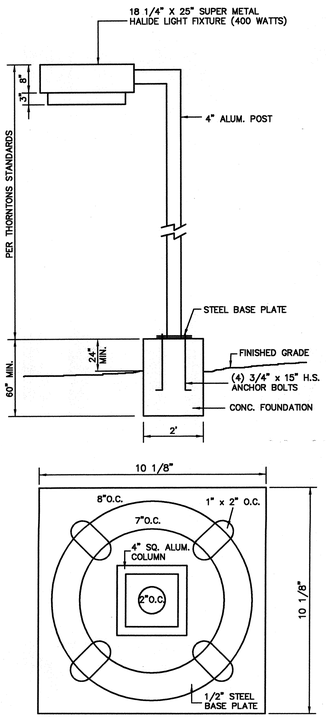

MOUNTING PLATE DETAIL

LIGHTING

THORNTONS STANDARD DETAIL

N.T.S.

16

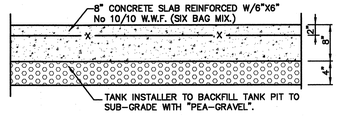

P.C.C. TANK PAD

THORNTONS STANDARD DETAIL

N.T.S.

5

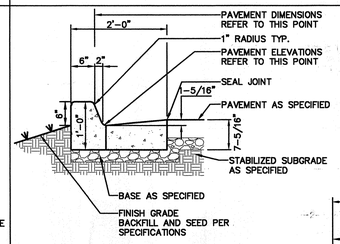

FREESTANDING P.C.C. CURB & GUTTER

N.T.S.

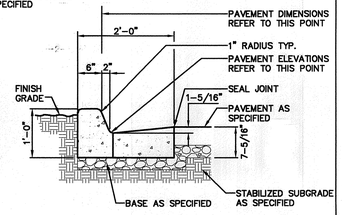

P.C.C. CURB & GUTTER

N.T.S.

6

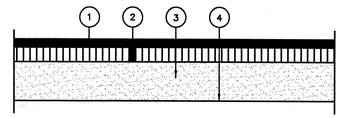

1. 1 1/2" CLASS 1 BITUMINOUS CONC. SURFACE COURSE
2. 2" CLASS 1 BITUMINOUS CONC. BINDER COURSE
3. 8" COMPACTED CA-6 BASE COURSE
4. SUBGRADE COMPACTION

BITUMINOUS CONCRETE PAVEMENT

THORNTONS STANDARD DETAIL

N.T.S.

1

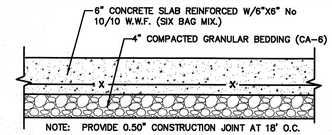

NOTE: PROVIDE 0.50" CONSTRUCTION JOINT AT 18' O.C.

AREA INSIDE OF TRASH ENCLOSURE

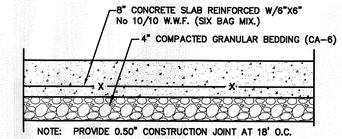

NOTE: PROVIDE 0.50" CONSTRUCTION JOINT AT 18' O.C.

AREA OUTSIDE OF TRASH ENCLOSURE

P.C.C. TRASH ENCLOSURE PAD

THORNTONS STANDARD DETAIL

N.T.S.

2

KEYED NOTES

1. PAINT BACKGROUND BENJAMIN MOORE M58 SAFETY & ZONE MARKING LATEX M58-30 – BLUE
2. PAINT SYMBOL BENJAMIN MOORE M58 SAFETY & ZONE MARKING LATEX M58-01 – WHITE
3. BOTTOM EDGE OF SYMBOL BOX SHALL MATCH END OF STALL STRIPE AT DRIVE AISLE END OF STALL.

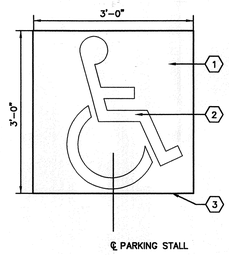

ADA PAVEMENT SYMBOL

N.T.S.

11

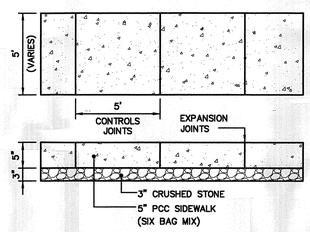

PROVIDE CONTROL JOINTS 5' O/C
PROVIDE EXPANSION JOINTS 50' O/C

P.C.C. SIDEWALK

THORNTONS STANDARD DETAIL

N.T.S.

7

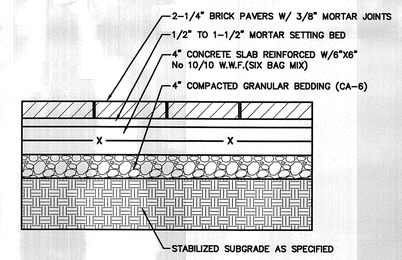

BRICK PAVEMENT

N.T.S.

3

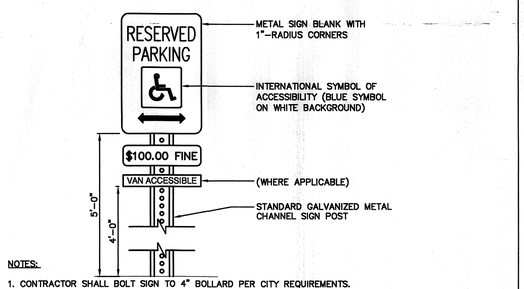

NOTES:

1. CONTRACTOR SHALL BOLT SIGN TO 4" BOLLARD PER CITY REQUIREMENTS.
2. CONTRACTOR SHALL VERIFY SIGN WITH CITY REQUIREMENTS AND SPECIFICATIONS BEFORE INSTALLATION. CITY-SPECIFIED SIGN SHALL TAKE PRECEDENCE OVER THIS DETAIL.
3. SIGNS SHALL BE LOCATED SO THAT THEY CANNOT BE OBSCURED BY A VEHICLE PARKED IN THE SPACE.

ADA PARKING SIGN

N.T.S.

12

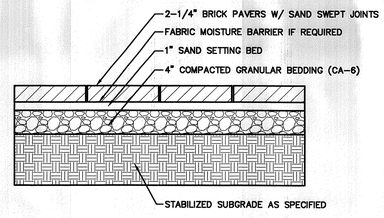

BRICK SIDEWALK

N.T.S.

8

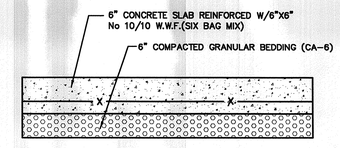

P.C.C. PAVEMENT

THORNTONS STANDARD DETAIL

N.T.S.

4

REVISIONS

DATE	BY	DESCRIPTION
5.5.08		SUFFICIENCY REVIEW COMMENTS PER TDOS#0000

DAVID B. GRANGER — STATE OF TENNESSEE

THORNTONS
5201 LAKE STATION ROAD, SUITE 200, LOUISVILLE, KY. 40229 502-968-8002

MYATT DRIVE AND ANDERSON LANE
MADISON, TN

DETAILS

DRAFTING: D.J.H.
DATE: 6-18-08
DESIGN: K.J.B.
SCALE: AS NOTED

CLAUS PYLE SCHOMER BURNS & DEHAVEN INC.
GPD ASSOCIATES
320 South Main Street, Suite 2311 Akron, Ohio 44311
330-972-2100 , Fax 330-972-2101

PROJECT NO.
C-501

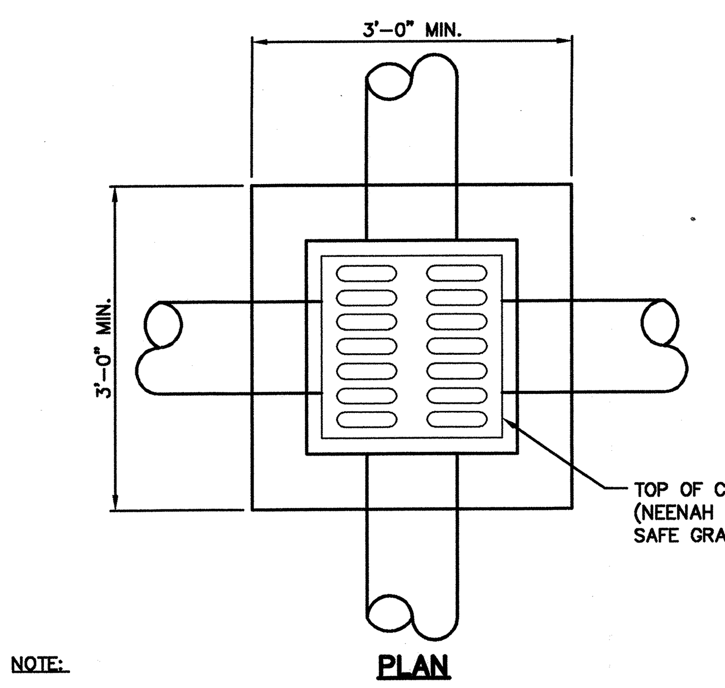

PLAN

NOTE:

1. PRECAST WALLS SHALL BE REINFORCED SUFFICIENTLY TO PERMIT SHIPPING AND HANDLING WITHOUT DAMAGE.
2. CAST-IN-PLACE CONCRETE SHALL BE 4,000 PSI @ 28 DAY. ALL PRECAST CONCRETE SHALL MEET STATE REQUIREMENTS WITH 6% +/- 2% AIR VOID CONTENT IN THE CURED CONCRETE.

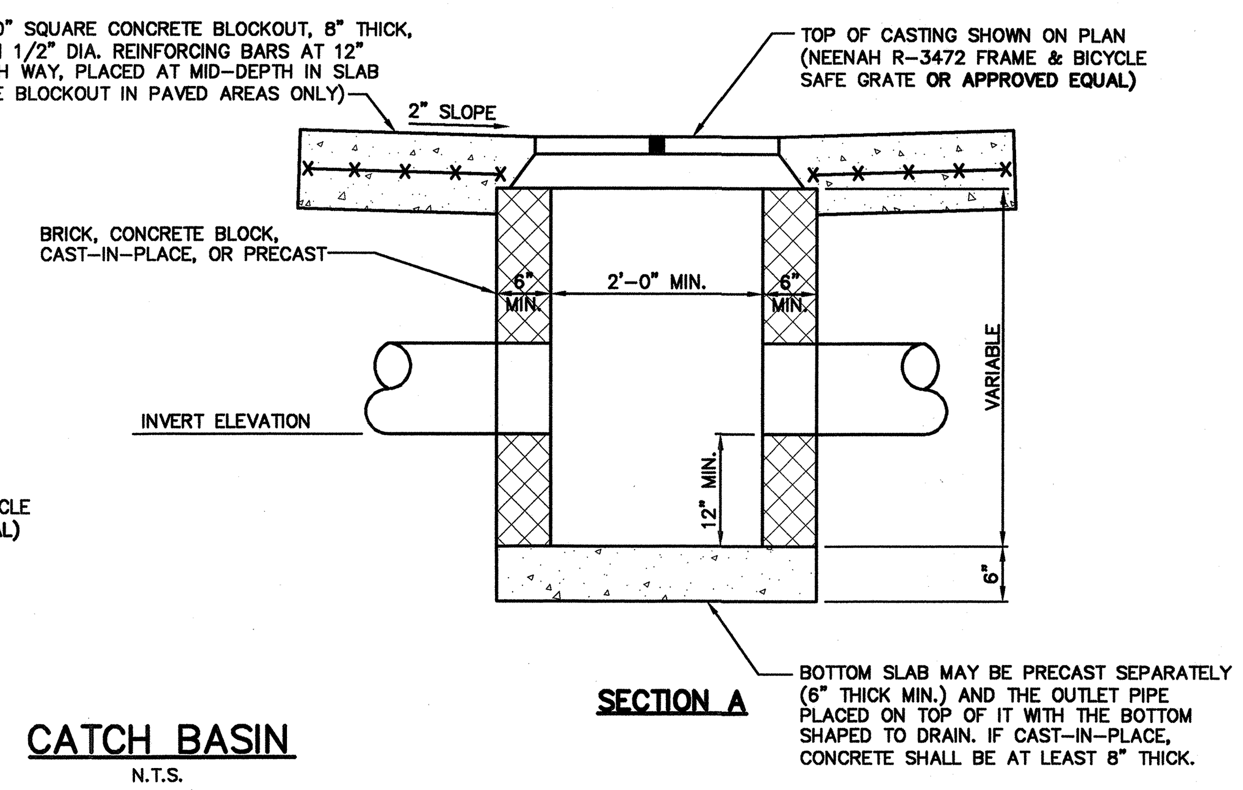

SECTION A

CATCH BASIN

N.T.S.

9

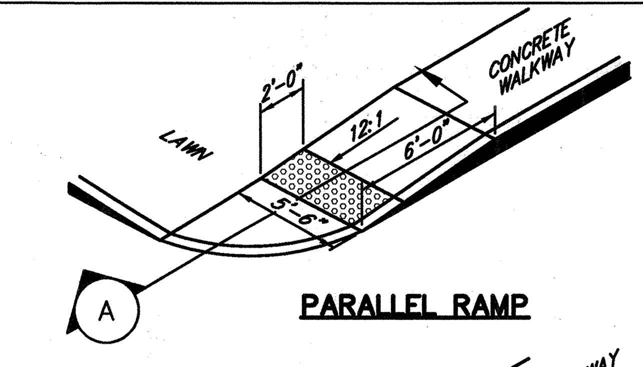

PARALLEL RAMP

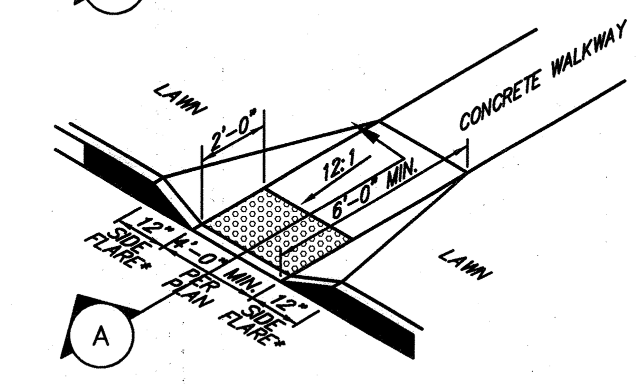

*NOTE: IF RAMP IS ADJACENT TO WALKWAY INSTEAD OF LAWN AS SHOWN ABOVE, THEN SIDE FLARES SHALL BE 6'-0" IN LIEU OF 12".

PERPENDICULAR RAMP

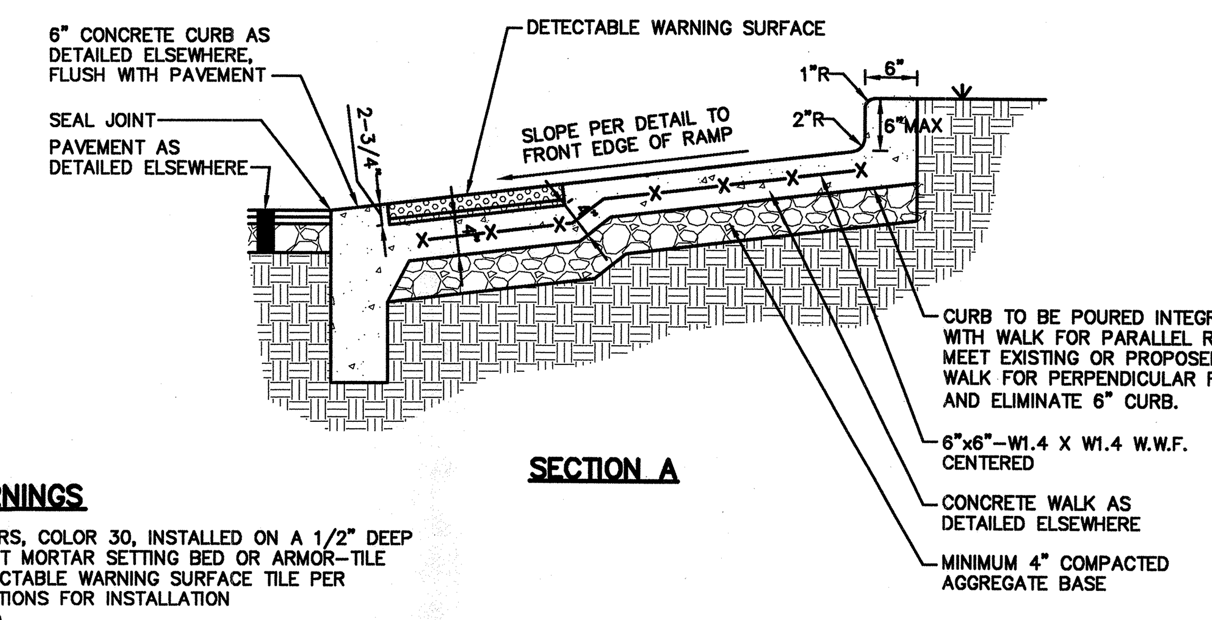

SECTION A

DETECTABLE WARNINGS

1. WHITACRE GREER PAVERS, COLOR 30, INSTALLED ON A 1/2" DEEP LATEX MODIFIED CEMENT MORTAR SETTING BED OR ARMOR-TILE TACTILE SYSTEMS DETECTABLE WARNING SURFACE TILE PER ARMOR-TILE SPECIFICATIONS FOR INSTALLATION (WWW.ARMOR-TILE.COM)
2. DETECTABLE WARNING COLOR SHALL CONTRAST VISUALLY WITH ADJOINING SURFACES, EITHER LIGHT-ON-DARK, OR DARK-ON-LIGHT.

ADA ACCESSIBLE RAMP

N.T.S.

1

REVISIONS		
DATE	DESCRIPTION	BY
10.2.08	SUFFICIENCY REVIEW COMMENTS SWGR T200800190	

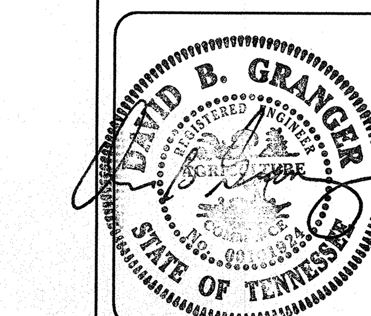

LUMBER FOR 8' SECTION
4 - 2"X 6": 8' LENGTH
1 - 4"X 4": 10' LENGTH
22 - 1"X 6": 6' LENGTH
ALL WOOD TO BE EXTERIOR GRADE PRESSURE TREATED CEDAR.

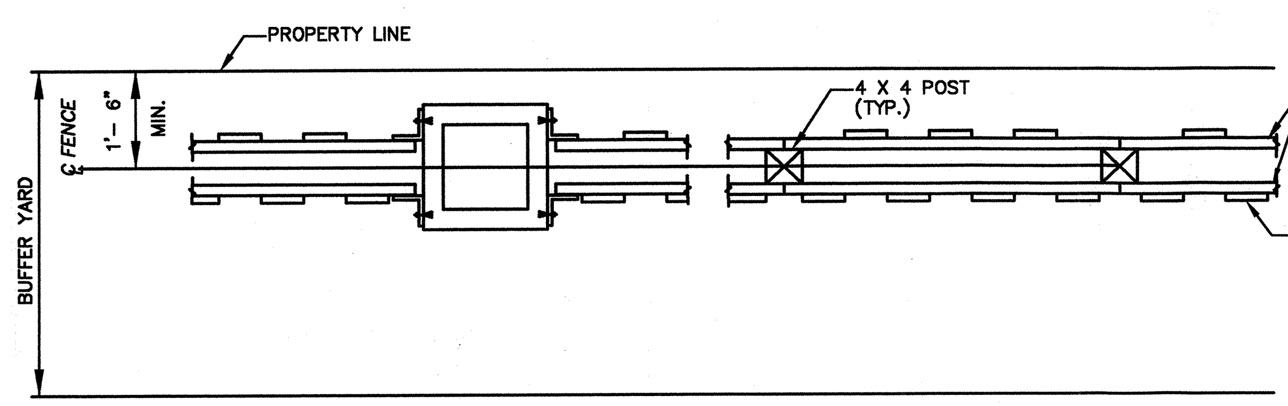

PLAN

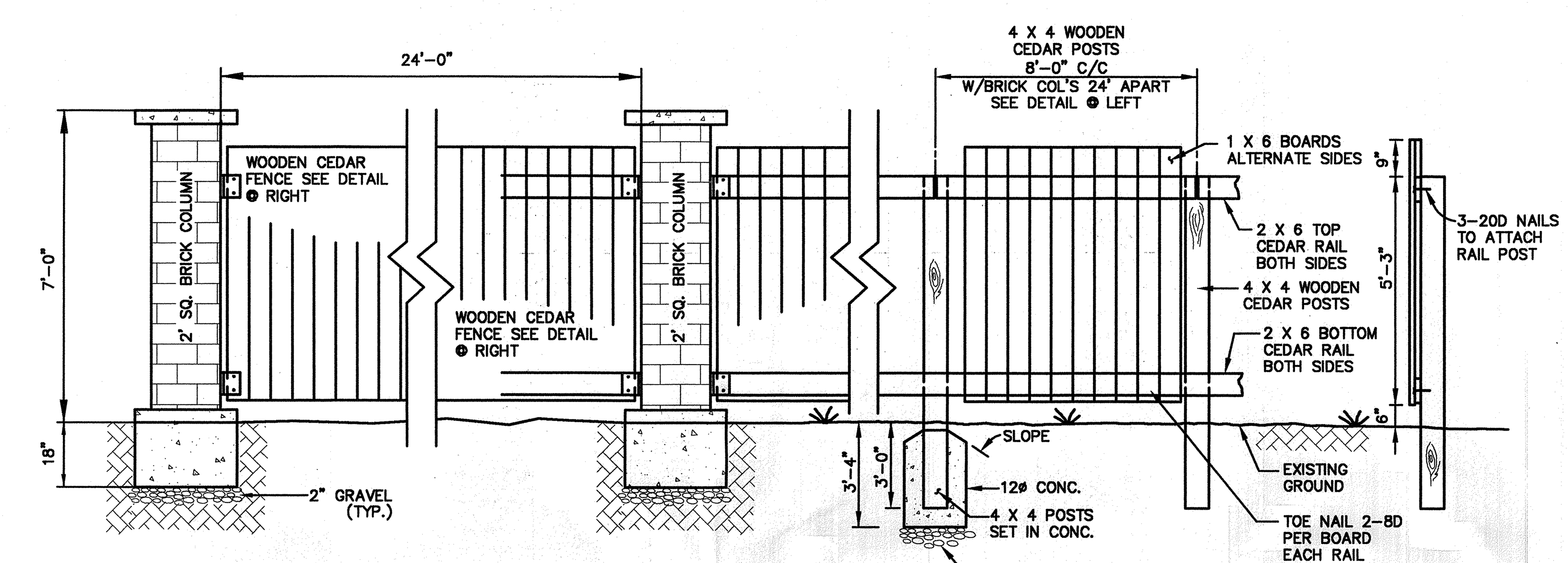

ELEVATION

WOODEN PRIVACY FENCE & BUFFER YARD

N.T.S.

6

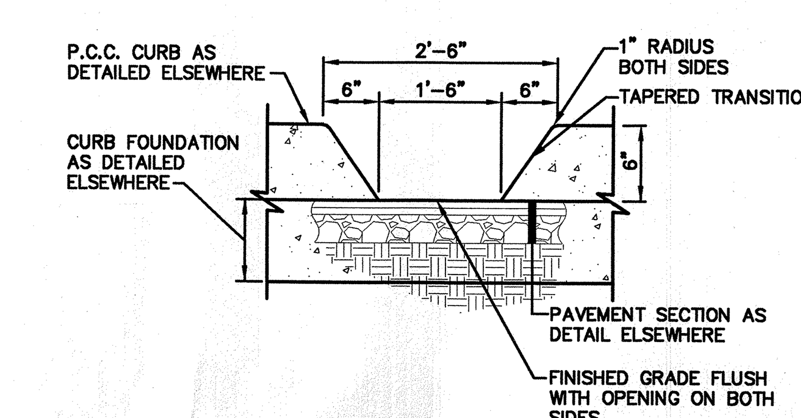

P.C.C. CURB OPENING

N.T.S.

2

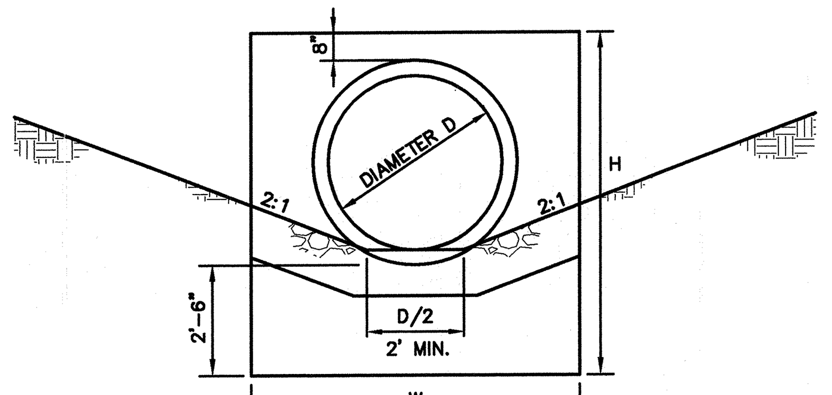

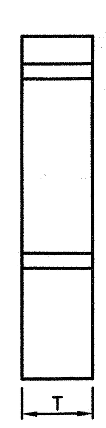

SIDE VIEW

CONCRETE HEADWALL DIMENSIONS			
CIRCULAR			
D	W	H	T
8"	3'-0"	4'-5"	12"
12"	3'-0"	4'-5"	12"
15"	4'-0"	4'-8"	12"
18"	5'-0"	5'-0"	12"

HEADWALL

N.T.S.

15

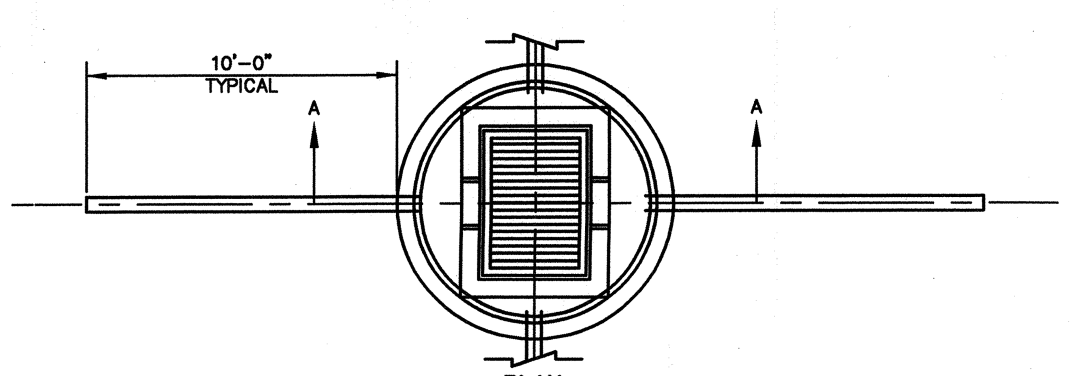

PLAN

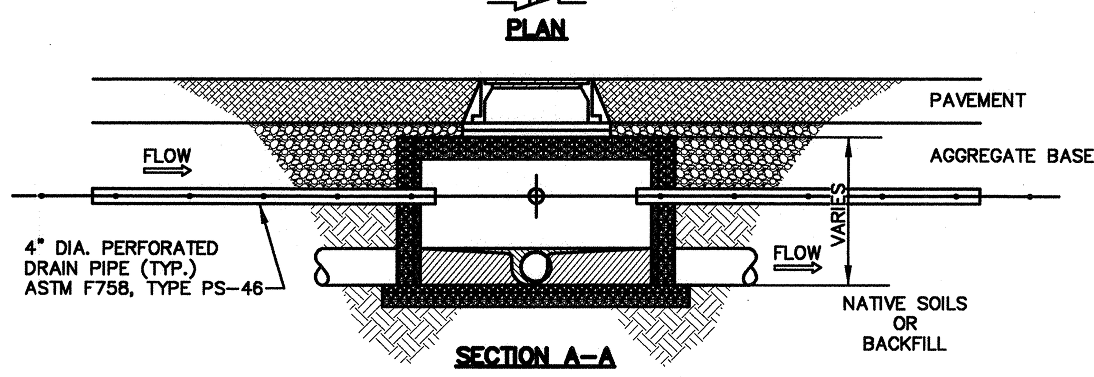

SECTION A-A

FINGER DRAIN DETAIL

N.T.S.

16

NOTE: PIPE OFF CENTER. EXACT LOCATION TO BE DETERMINED IN FIELD.

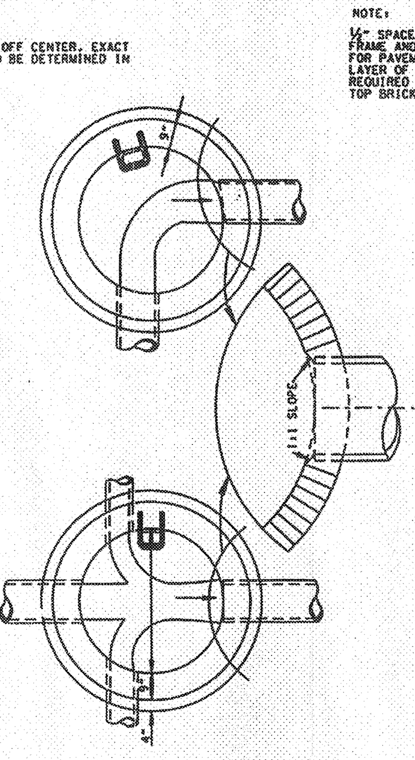

TYPICAL PLANS

CUT-OUT HOLES FOR INLET & OUTLET PIPES			
INSIDE DIAMETER (X) OF PIPE (INCHES)	DIAMETER OF CUT-OUT HOLES (INCHES)		
	CONCRETE PIPE	CORRUGATED METAL PIPE	POLYETHYLENE PIPE
18	26	21	24
24	32	27	31
30	40	33	39
36	47	40	45
42	54	46	50
48	61	52	56
54	68	58	——
60	75	64	——
66	82	70	——
72	90	76	——
78	96	82	——

CUT-OUT HOLES FOR PRECAST STRUCTURES TO BE CORED OR FORMED IN ORDER TO OBTAIN A SMOOTH EDGED HOLE. SCORED OR ETCHED HOLES WITH REINFORCING STEEL LEFT UNCUT WILL NOT BE PERMITTED.

NOTE:
½" SPACE TO BE LEFT BETWEEN FRAME AND BRICK WORK TO ALLOW FOR PAVEMENT EXPANSION AND A LAYER OF ROOFING PAPER WILL BE REQUIRED BETWEEN PAVEMENT AND TOP BRICK COURSE.

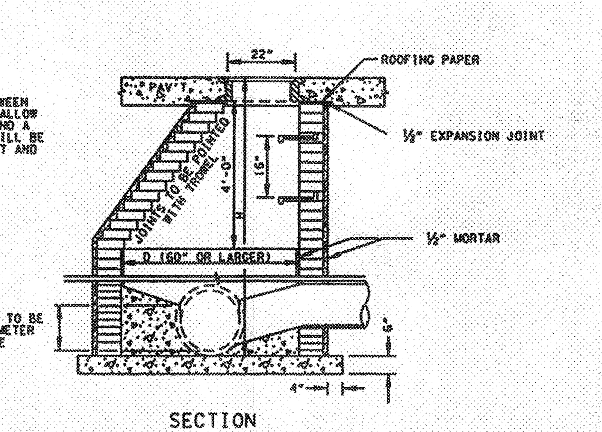

SECTION
BRICK MANHOLE WITH ECCENTRIC TAPER

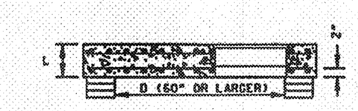

SECTION

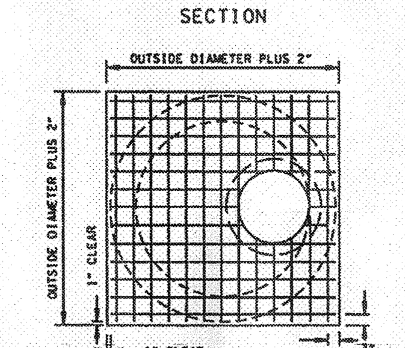

PLAN FOR 8" THICK REINFORCED CONCRETE SLAB

COST OF REINFORCED CONCRETE SLAB TO BE INCLUDED IN PRICE BID FOR MANHOLE OF REQUIRED DEPTH.

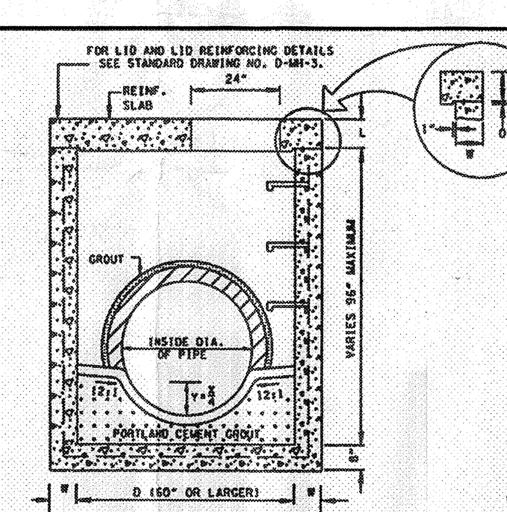

STANDARD FLAT TOP MANHOLE

WHEN MANHOLES OF BRICK ARE TOO SHALLOW TO SECURE PROPER BATTER, THE WALLS SHALL BE BUILT VERTICALLY AND THE STRUCTURE CAPPED WITH A CLASS "A" CONCRETE SLAB - SEE TABLE FOR THICKNESS. (WITH MANHOLE FRAME LOCATED ECCENTRICALLY IN SLAB) REINFORCED WITH ⅝" DIA. DEFORMED STEEL BARS 2" FROM BOTTOM AND TOP OF SLAB AND SPACED 6" CENTER TO CENTER BOTH LONGITUDINALLY AND TRANSVERSELY. SLAB TO BE BUILT TO BASE OR PAVEMENT GRADE.

GENERAL NOTES

Ⓐ THIS MANHOLE WILL CONFORM TO THE STANDARD DRAWING UNLESS OTHERWISE SHOWN OR DIRECTED BY THE ENGINEER TO MEET SPECIAL CONDITIONS. THERE WILL BE NO VARIATION FROM THE CONTRACT PRICE DUE TO SUCH CHANGES. IN ALL CASES IT MUST BE BUILT LARGE ENOUGH TO ACCOMMODATE INLET AND OUTLET PIPES.

Ⓑ THE PRECAST CONCRETE MANHOLE SHALL MEET THE REQUIREMENTS AND SPECIFICATIONS SET OUT IN ASTM-C478 LATEST REVISION.

Ⓒ ALL CONCRETE FOR MASONRY MANHOLE TO BE CLASS "A".

Ⓓ FOR MASONRY MANHOLES, ALL WALLS WILL BE LAID IN COURSES CONSISTING OF HEADERS ONLY.

Ⓔ THE COST OF CASTINGS FOR COVERS AND RIMS AND OF MANHOLE STEPS SHALL BE INCLUDED IN THE UNIT PRICE BID FOR MANHOLES.

Ⓕ THE PLACING OF CONCRETE AND FORMING OF INVERTS AS INDICATED FOR BRICK MANHOLES SHALL APPLY IN LIKE MANNER FOR PRECAST MANHOLES. COST OF FURNISHING AND PLACING THE CONCRETE TO BE INCLUDED IN UNIT PRICE BID PER MANHOLE.

Ⓖ PAYMENT FOR BRICK MANHOLES WILL BE MADE UNDER ITEM NUMBERS 611-01.02 MANHOLES, > 4'-8' DEPTH AND 611-01.03, MANHOLES, > 8'-12' DEPTH PER EACH.

Ⓗ PAYMENT FOR PRECAST CONCRETE CIRCULAR MANHOLES WILL BE MADE UNDER ITEM NUMBERS 611-01.02 MANHOLES, > 4'-8' DEPTH THROUGH 611-01.09, MANHOLES, > 24'-28' DEPTH PER EACH. PAYMENT FOR MANHOLES DEEPER THAN 28' WILL BE MADE UNDER ITEMS NUMBERS 611-01.10 THROUGH 611-01.19, MANHOLE ____' TO ____' DEPTH PER EACH.

MANHOLE DIMENSIONS					
INSIDE DIA. OF MANHOLE D (INCHES)	WALL THICKNESS W (INCHES)	LID THICKNESS L (INCHES)	OUTSIDE DIA. OF MANHOLE D + 2W (INCHES)	MAX. INLET OR OUTLET CONC. PIPE SIZE - STR. (INCHES)	MAX. INLET OR OUTLET CONC. PIPE SIZE - 90° (INCHES)
60	6	8	72	36	24
72	7	9	86	48	30
84	8	9	100	60	36
96	9	10	114	66	42
108	10	10	128	72	48
120	11	10	142	78	54

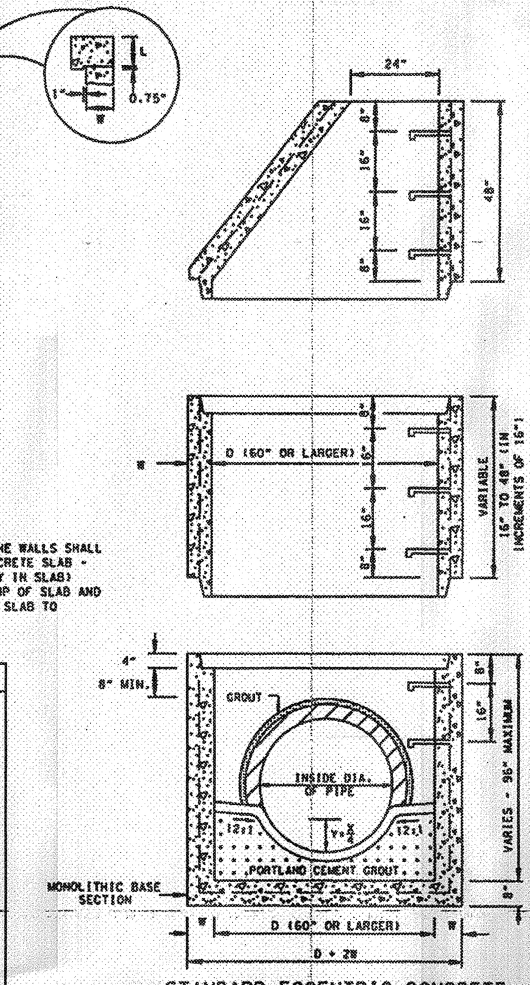

STANDARD ECCENTRIC CONCRETE RISER SECTION AND BASE SECTION

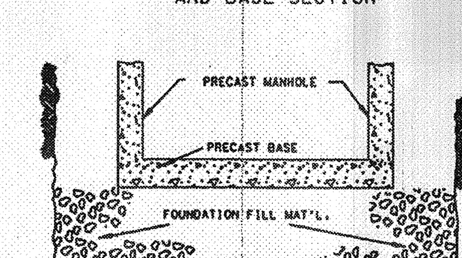

FOUNDATION DETAIL FOR PRECAST BASE

NOTE:
COST OF FURNISHING AND PLACING FOUNDATION FILL MATERIAL TO BE INCLUDED IN UNIT PRICE BID FOR 611-02, MANHOLES. FOUNDATION FILL MATERIAL SHALL BE IN CONFORMANCE WITH SECTION 204 OF THE T.D.O.T. SPECIFICATIONS.

REV. 11-20-72: WALL THICKNESS DELETED ON PRECAST SECTIONS.
REV. 1-15-73: ENTRANCE TO OUTLET PIPE BEVELED.
REV. 2-1-73: SKETCH ADDED SHOWING BEVELED ENTRY.
REV. 1-1-76: CHANGED DWG. NO. FROM S-M-3 TO D-MH-3 (MASONRY DETAILS ADAPTED FROM OLD DWG. NO. S-M-2o).
REV. 7-2-84: ADDED NOTE TO FOUNDATION DETAIL.
☐ REV. 7-29-96: REDREW SHEET ON CADD AND MADE MINOR CHANGES.
☐ REV. 1-19-97: ADDED GENERAL NOTE Ⓗ. ADDED CUT-OUT HOLE TABLE. ADDED MANHOLE DIMENSION TABLE.
☐ REV. 4-15-97: CHANGED MANHOLE DIMENSION TABLE.
☐ REV. 5-1-97: CHANGED DRAWING NO. FROM D-MH-3 TO D-MH-2. CHANGED BASE SECTION TO MONOLITHIC BASE SECTION.
☐ REV. 5-27-97: ADDED 108 AND 120 INCH DIAMETER MANHOLES.
☐ REV. 5-27-01: CHANGED GENERAL NOTE Ⓖ AND ADDED GENERAL NOTE Ⓗ. ADDED MANHOLE MAXIMUM DEPTH NOTES.

MANHOLE MAXIMUM DEPTH NOTES
① MAXIMUM DEPTH FOR BRICK MANHOLES IS 12.00'.
② MAXIMUM DEPTH FOR PRECAST CONCRETE CIRCULAR MANHOLES IS 40.00'.

☐ MINOR REVISION -- FHWA APPROVAL NOT REQUIRED.

STATE OF TENNESSEE
DEPARTMENT OF TRANSPORTATION

STANDARD MASONRY & PRECAST NO. 3 MANHOLE

AUG. 1972 | D-MH-2

TDOT STANDARD DETAIL

N.T.S.

8

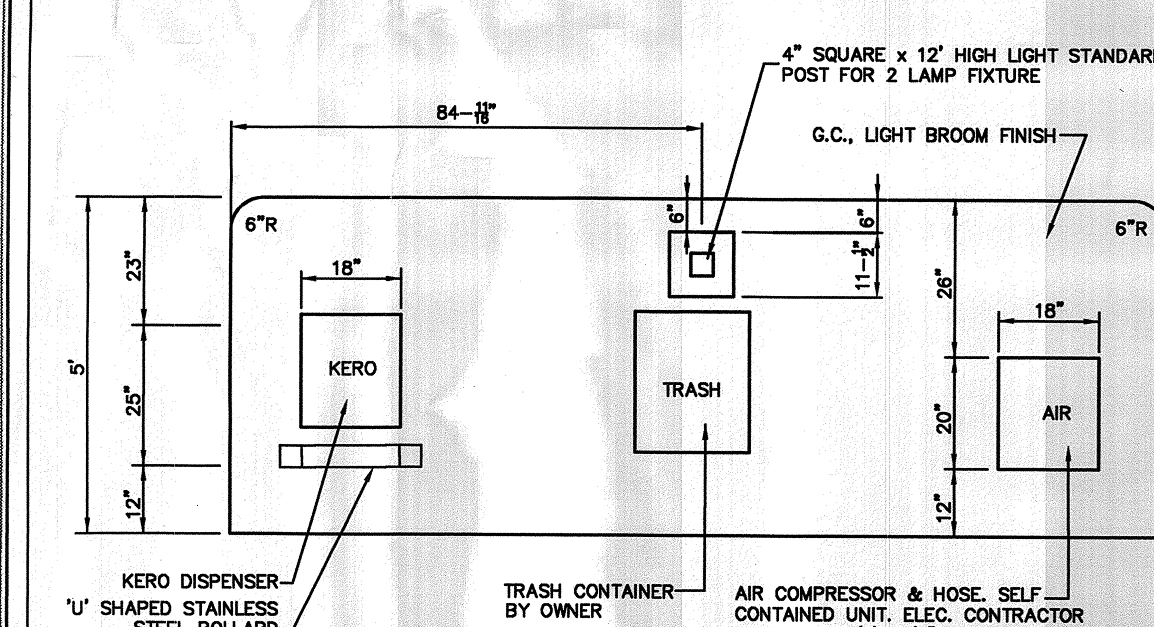

SERVICE ISLAND

THORNTONS STANDARD DETAIL

N.T.S.

3

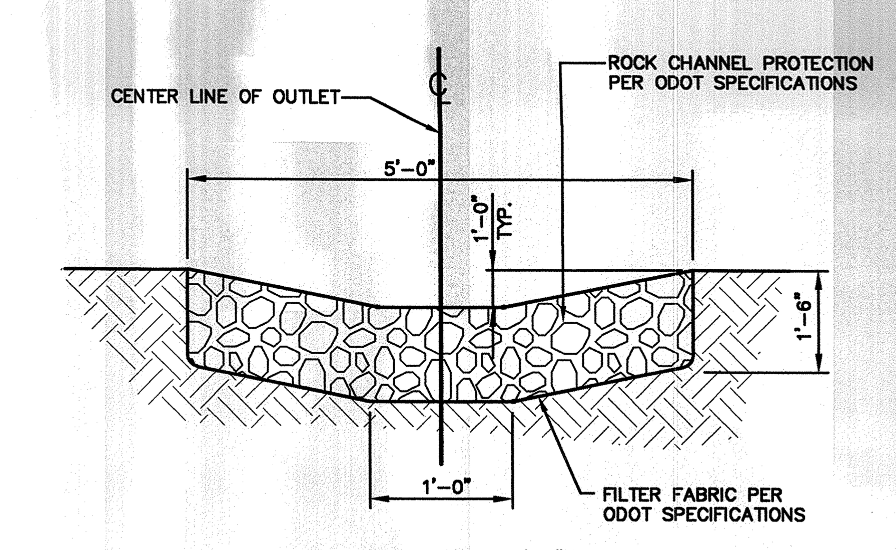

NOTE: LENGTH OF RCP=10'-0"

ROCK CHANNEL PROTECTION

N.T.S.

4

THORNTONS
10101 LINN STATION ROAD, SUITE 200, LOUISVILLE, KY. 40223 502-425-8022

MYATT DRIVE AND ANDERSON LANE
MADISON, TN

DETAILS

DESIGN: K.J.B. | DRAFTING: D.J.H.
SCALE: AS NOTED | DATE: 6-18-08

GLAUS PYLE SCHOMER BURNS & DEHAVEN INC.
GPD ASSOCIATES
520 South Main Street, Suite 2531 Akron, Ohio 44311
330-572-2100 , Fax 330-572-2101

PROJECT NO.
C-502

RETAINING WALL NOTES

DESCRIPTION

SCOPE

WORK INCLUDES FURNISHING AND INSTALLING MODULAR CONCRETE BLOCK RETAINING WALL UNITS, GEOGRID REINFORCEMENT, WALL INFILL, GRAVEL LEVELING COURSE & FILTER FABRIC TO THE LINES AND GRADES DESIGNATED ON THE CONSTRUCTION DRAWINGS AND AS SPECIFIED HEREIN.

REFERENCE STANDARDS

ASTM C1372-97 STANDARD SPECIFICATIONS FOR SEGMENTAL RETAINING WALL UNITS.

DELIVERY, STORAGE, AND HANDLING

A. CONTRACTOR SHALL CHECK THE MATERIALS UPON DELIVERY TO ASSURE PROPER MATERIAL HAS BEEN RECEIVED.

B. CONTRACTOR SHALL PREVENT EXCESSIVE MUD, WET CEMENT, AND LIKE MATERIALS FROM COMING IN CONTACT WITH THE MATERIALS.

C. CONTRACTOR SHALL PROTECT THE MATERIALS FROM DAMAGE. DAMAGED MATERIAL SHALL NOT BE INCORPORATED IN THE PROJECT.

D. CONTRACTOR SHALL CHECK THE GEOGRID UPON DELIVERY TO ASSURE THAT THE PROPER MATERIAL HAS BEEN RECEIVED.

MATERIALS

MODULAR WALL UNITS

A. WALL UNITS SHALL BE ALLAN BLOCK RETAINING WALL UNITS WITH A 12° SET BACK AS PRODUCED BY A LICENSED MANUFACTURER, OR AN APPROVED EQUAL.

B. WALL UNITS SHALL HAVE MINIMUM 28 DAY COMPRESSIVE STRENGTH OF 3000 PSI IN ACCORDANCE WITH ASTM C1372-97. THE CONCRETE UNITS SHALL HAVE ADEQUATE FREEZE-THAW PROTECTION WITH AN AVERAGE ABSORPTION RATE OF 7.5 LB/FT3.

C. EXTERIOR DIMENSIONS SHALL BE UNIFORM AND CONSISTENT. MAXIMUM DIMENSIONAL DEVIATIONS SHALL BE 0.125 INCH, NOT INCLUDING TEXTURED FACE.

D. WALL UNITS SHALL PROVIDE A MINIMUM OF 110 POUNDS TOTAL WEIGHT PER SQUARE FOOT OF WALL FACE AREA. FILL CONTAINED WITHIN THE UNITS MAY BE CONSIDERED 80% EFFECTIVE WEIGHT.

E. EXTERIOR FACE SHALL BE TEXTURED. COLOR AS SPECIFIED BY OWNER.

GRANULAR BACKFILL

GRANULAR BACKFILL USED IN THE STRUCTURE SHALL BE ITEM 304 AGGREGATE BASE OR ITEM 703.11, GRANULAR MATERIAL TYPE 2 WITH THE FOLLOWING EXCEPTIONS. NO SLAG SHALL BE ALLOWED. THE TOTAL PERCENT PASSING THE #200 SIEVE SHALL BE 0 TO 7 PERCENT PRIOR TO THE PLACEMENT OPERATION. THE CONTRACTOR SHALL TRANSPORT AND HANDLE THE MATERIAL TO MINIMIZE THE SEGREGATION OF THE MATERIAL PRIOR TO THE PLACEMENT.

BACKFILL SHALL BE SPREAD IN UNIFORM LIFTS NOT EXCEEDING 8 INCHES IN UNCOMPACTED THICKNESS. THE CONTRACTOR SHALL DECREASE THE GRANULAR BACKFILL LIFT THICKNESS IF NECESSARY TO OBTAIN THE SPECIFIED DENSITY. COMPACTION OF THE GRANULAR BACKFILL MATERIAL SHALL BE IN ACCORDANCE WITH ALL PERTINENT REQUIREMENTS OF ITEM 203.12. THE MOISTURE CONTENT OF THE GRANULAR BACKFILL MATERIAL PRIOR TO AND DURING COMPACTION SHALL BE UNIFORMLY DISTRIBUTED THROUGHOUT EACH LAYER AND SHALL CONFORM TO THE REQUIREMENTS OF ITEM 203.11.

EMPLOY COMPACTION METHODS USING LIGHTWEIGHT COMPACTION EQUIPMENT THAT WILL NOT DISRUPT THE STABILITY OR BATTER OF THE WALL. ONLY HAND OPERATED PLATE COMPACTION EQUIPMENT SHALL BE USED WITHIN 3 FEET OF WALL FACE.

BACKFILL SHALL BE PLACED IN A MANNER THAT MINIMIZES THE DEVELOPMENT OF WRINKLES IN AND/OR MOVEMENT OF THE GEOGRID.

TRACKED CONSTRUCTION EQUIPMENT SHALL NOT BE OPERATED DIRECTLY ON THE GEOGRID. A MINIMUM BACKFILL THICKNESS OF 6 INCHES IS REQUIRED PRIOR TO OPERATION OF TRACKED VEHICLES OVER THE GEOGRID. TURNING OF TRACKED VEHICLES SHOULD BE KEPT TO A MINIMUM TO PREVENT TRACKS FROM DISPLACING THE FILL AND DAMAGING THE GEOGRID.

RUBBER TIRED EQUIPMENT MAY PASS OVER THE GEOGRID AT SLOW SPEEDS, LESS THAN 10 MPH. SUDDEN BRAKING AND SHARP TURNING SHALL BE AVOIDED.

REPLACE DAMAGED GEOGRID AT CONTRACTOR'S COST AT DIRECTION OF ENGINEER.

GEOGRID

A. GEOGRID PRODUCTS SHALL BE OF HIGH DENSITY POLYETHYLENE OR POLYESTER YARNS ENCAPSULATED IN A PROTECTIVE COATING SPECIFICALLY FABRICATED FOR USE AS A SOIL REINFORCEMENT MATERIAL.

B. GEOGRID SHALL BE FORTRAC 35/20-20 OR AN APPROVED EQUAL HAVING THE PROPERTY REQUIREMENTS AS DESCRIBED WITHIN THE MANUFACTURERS SPECIFICATIONS.

ACCEPTABLE MANUFACTURERS

A MANUFACTURER'S PRODUCT SHALL BE APPROVED BY THE ENGINEER.

CAPSTONE ADHESIVE

CAPSTONE ADHESIVE SHALL BE SIKADUR 31, HI-MOD GEL OR AN APPROVED EQUAL.

WALL INFILL & LEVELING COURSE

MATERIAL SHALL BE NO. 57 LIMESTONE

FILTER FABRIC

FILTER FABRIC SHALL SATISFY THE REQUIREMENTS OF CMS ITEM 712.09, TYPE B.

WALL CONSTRUCTION EXCAVATION

CONTRACTOR SHALL EXCAVATE TO THE LINES AND GRADES SHOWN ON THE CONSTRUCTION DRAWINGS. CONTRACTOR SHALL USE CAUTION NOT TO OVER-EXCAVATE BEYOND THE LINES SHOWN, OR TO DISTURB THE BASE ELEVATIONS BEYOND THOSE SHOWN.

FOUNDATION SOIL PREPARATION

A. FOUNDATION SOIL SHALL BE EXCAVATED AS DIMENSIONED ON THE PLANS AND COMPACTED TO A MIN. 95% COMPACTION PRIOR TO PLACEMENT OF THE BASE MATERIAL.

B. FOUNDATION SOIL SHALL BE EXAMINED BY A GEOTECHNICAL ENGINEER (RETAINED BY THE CONTRACTOR) TO INSURE THAT THE ACTUAL FOUNDATION SOIL STRENGTH MEETS OR EXCEEDS AN ASSUMED 2000 PSF NET ALLOWABLE BEARING PRESSURE. SOIL NOT MEETING THE REQUIRED STRENGTH SHALL BE REMOVED AND REPLACED WITH ACCEPTABLE MATERIAL.

C. OVER-EXCAVATED AREAS SHALL BE FILLED WITH APPROVED COMPACTED BACKFILL MATERIAL.

D. FOUNDATION SOIL SHALL BE PROOF ROLLED PRIOR TO FILL AND GEOGRID PLACEMENT.

BASE

A. BASE MATERIAL SHALL BE PLACED AS SHOWN ON CONSTRUCTION DRAWING. TOP OF BASE SHALL BE LOCATED TO ALLOW BOTTOM WALL UNITS TO BE BURIED TO PROPER DEPTHS AS PER WALL HEIGHTS AND SPECIFICATIONS.

B. BASE MATERIAL SHALL BE INSTALLED ON UNDISTURBED NATIVE SOILS OR SUITABLE REPLACEMENT FILLS COMPACTED AT 95% STANDARD PROCTOR.

C. BASE SHALL BE COMPACTED AT 95% STANDARD PROCTOR TO PROVIDE A LEVEL HARD SURFACE ON WHICH TO PLACE THE FIRST COURSE OF BLOCKS. THE BASE SHALL BE CONSTRUCTED TO INSURE PROPER WALL EMBEDMENT AND THE FINAL ELEVATION SHOWN ON THE PLANS. WELL-GRADED SAND CAN BE USED TO SMOOTH THE TOP 1/2 INCH ON THE LEVELING PAD.

D. BASE MATERIAL SHALL BE A 6 INCH MINIMUM DEPTH.

WALL INSTALLATION

A. THE FIRST COURSE OF WALL UNITS SHALL BE PLACED ON THE PREPARED BASE. THE UNITS SHALL BE CHECKED FOR LEVEL AND ALIGNMENT AS THEY ARE PLACED.

B. ENSURE THAT UNITS ARE IN FULL CONTACT WITH BASE. PROPER CARE SHALL BE TAKEN TO DEVELOP STRAIGHT LINES AND SMOOTH CURVES ON BASE COURSE AS PER WALL LAYOUT.

C. ALL CAVITIES IN AND AROUND THE BASE ROW SHALL BE FILLED WITH BASE MATERIALS AND COMPACTED. BACKFILL FRONT AND BACK OF ENTIRE BASE ROW TO FIRMLY LOCK IN PLACE. CHECK AGAIN FOR LEVEL AND ALIGNMENT. ALL EXCESS MATERIAL SHALL BE SWEPT FROM TOP OF UNITS.

D. INSTALL NEXT COURSE OF WALL UNITS ON TOP OF BASE ROW. POSITION BLOCKS TO BE OFFSET FROM SEAMS OF BLOCKS BELOW IN A RUNNING BOND PATTERN. CHECK EACH BLOCK FOR PROPER ALIGNMENT AND LEVEL. FILL ALL CAVITIES IN WALL UNITS.

E. INSTALL BLOCK WALL TO DESIGNATED HEIGHT OF FIRST GEOGRID LAYER, BACKFILL AND COMPACT BEHIND WALL TO DEPTH EQUAL TO DESIGNED GRID LENGTH.

F. CUT GEOGRID TO DESIGNED EMBEDMENT LENGTH AND PLACE ON TOP OF BLOCK TO BACK EDGE OF LIP OR PLACE GEOGRID SUCH THAT IT INTERLOCKS TIGHT AGAINST BLOCK KEY. EXTEND HORIZONTALLY ON COMPACTED BACKFILL.

G. PLACE NEXT COURSE OF BLOCK ON TOP OF GRID AND FILL BLOCK CORES WITH DRAINAGE FILL TO LOCK IN PLACE. REMOVE SLACK IN GRID AND STAKE TO MAINTAIN TENSION.

H. LAY GEOGRID AT THE PROPER ELEVATION AND ORIENTATIONS SHOWN ON THE CONSTRUCTION DRAWINGS OR AS DIRECTED BY THE ENGINEER.

I. CORRECT ORIENTATION (STRENGTH DIRECTION) OF THE GEOGRID SHALL BE VERIFIED BY THE ENGINEER.

J. FOLLOW MANUFACTURERS GUIDELINES FOR OVERLAP REQUIREMENTS.

K. INSTALL EACH SUBSEQUENT COURSE IN LIKE MANNER. REPEAT PROCEDURE TO THE EXTENT OF WALL HEIGHT.

L. ALLOWABLE CONSTRUCTION TOLERANCE AT THE WALL FACE IS 2 DEGREES VERTICALLY AND 1 INCH IN 10 FEET HORIZONTALLY.

METHOD OF MEASUREMENT

THE QUANTITY SHALL BE SQUARE FEET OF VERTICAL (NOT SLOPED) WALL SURFACE.

THIS WORK SHALL INCLUDE THE FABRICATION, FURNISHING, AND ERECTION OF THE MODULAR CONCRETE BLOCK RETAINING WALL WITH GEOGRID REINFORCEMENT INCLUDING MODULAR BLOCK, GEOGRID REINFORCEMENT, LEVELING, COURSE, BLOCK INFILL, FILTER FABRIC AND ALL INCIDENTALS, LABOR AND EQUIPMENT NECESSARY TO COMPLETE THIS ITEM.

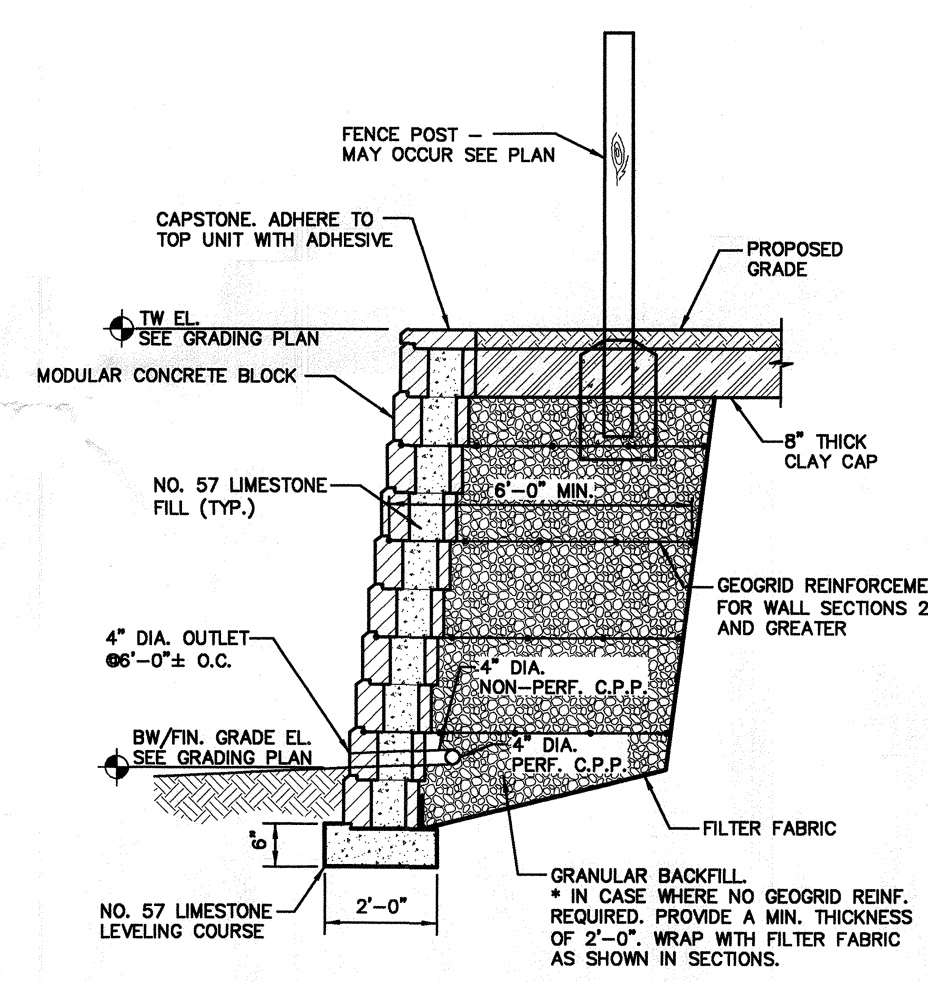

RETAINING WALL SECTION

N.T.S.

11

KEYED NOTES

1. TOPSOIL & SOD, OR PAVEMENT AS DETAILED ELSEWHERE.
2. CONTINUOUS METALLIC WARNING TAPE
3. CLEAN SELECT GRANULAR BACKFILL
4. 6" CLEAN SAND ENVELOPE
5. 4" PVC ELECTRICAL CONDUITS (SCHEDULE 40), QUANTITY AS REQUIRED
6. 4" PVC TELEPHONE CONDUIT (SCHEDULE 40), QUANTITY AS REQUIRED

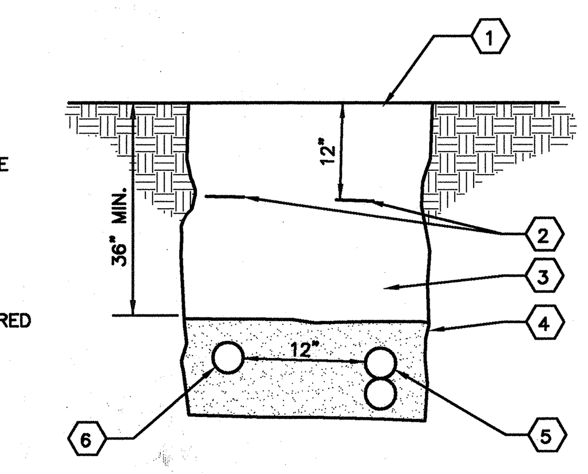

ELECTRICAL & COMMUNICATIONS SERVICE TRENCH

N.T.S.

5

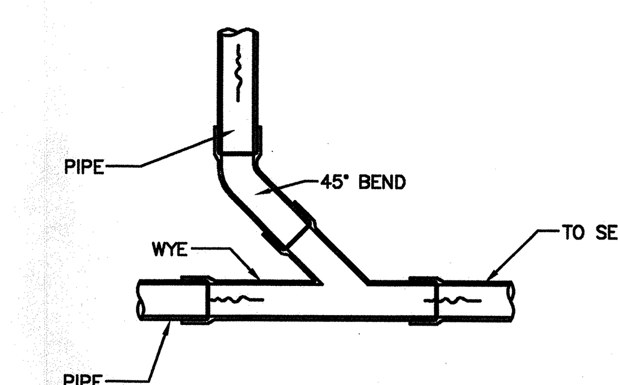

WYE CONNECTION

N.T.S.

1

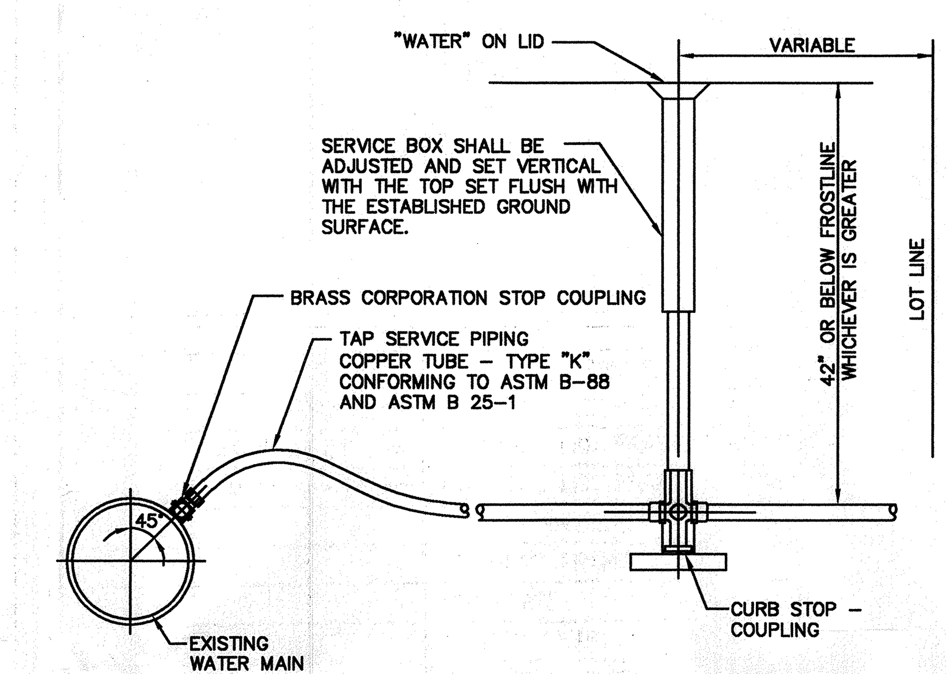

WATER SERVICE TAP

N.T.S.

6

KEYED NOTES

1. CONCRETE, MATCH PAVEMENT SPEC.
2. 6" (MIN.) AGGREGATE BASE
3. 6" DIA. CLEAN-OUT PIPE
4. CAP AND SEAL CONDUIT
5. THREADED CLEAN-OUT CAP
6. CAST-IRON MONUMENT BOX, EJIW 1570 OR APPROVED EQUAL.
7. 45° BEND
8. WYE
9. SEWER

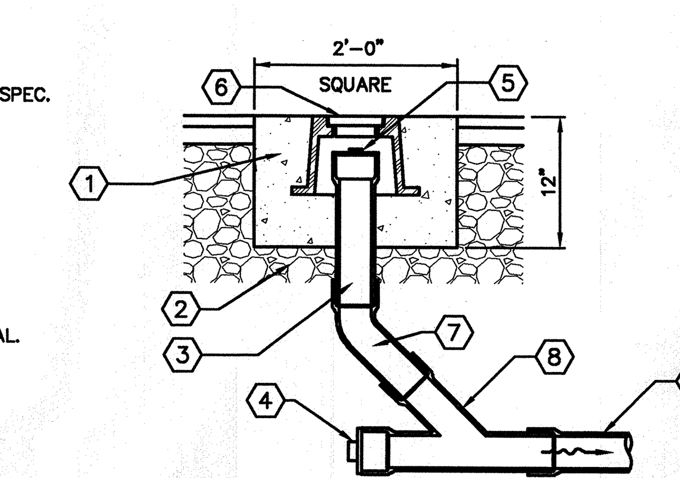

CLEAN OUT (PAVEMENT AREA)

N.T.S.

2

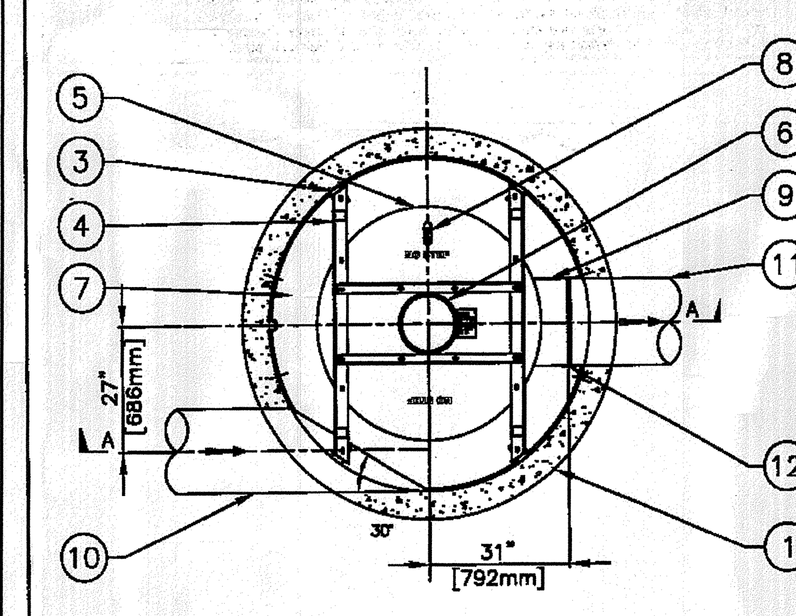

PLAN VIEW

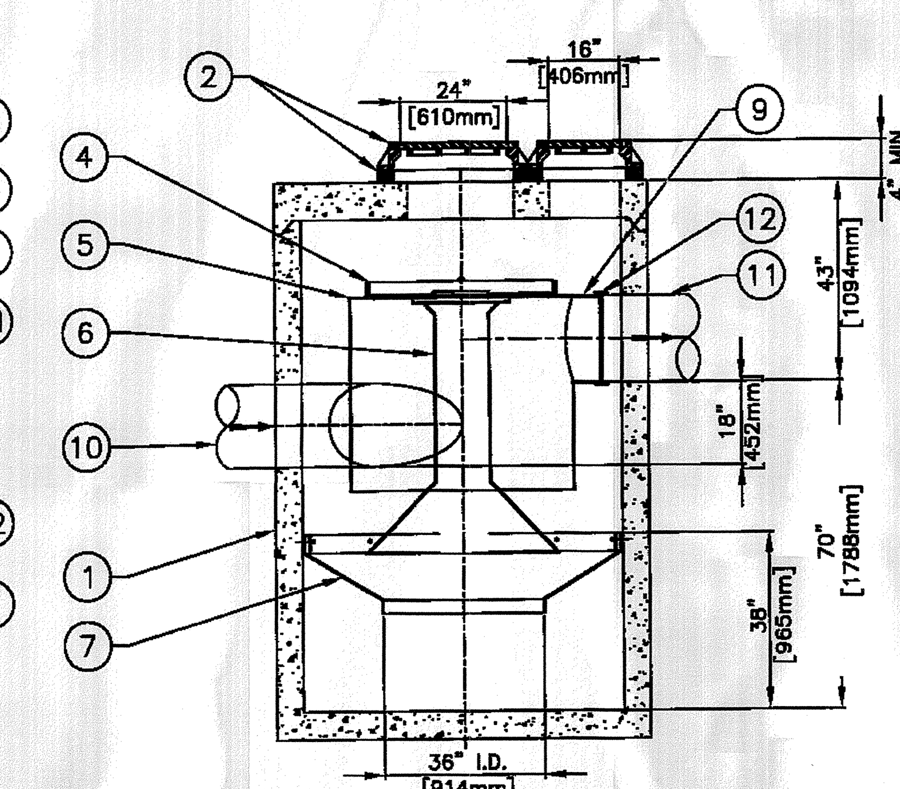

SECTION A-A

PARTS LIST			
ITEM	SIZE		DESCRIPTION
1	72 in.	1829mm	I.D. CONCRETE MANHOLE
2	24 in.	610mm	MANHOLE LID, FRAME & COVER
	16 in.	406mm	MANHOLE LID, FRAME & COVER
3			LEDGER ANGLE (TYP.)
4			SUPPORT FRAME
5			DIP PLATE
6			CENTER SHAFT & CONE
7			BENCHING SKIRT
8			FLOATABLES LID W/ VENT
9	18 in.	457mm	OVERFLOW PIPE STUB
10	18 in.	457mm	TANGENTIAL INLET PIPE (BY OTHERS)
11	18 in.	457mm	OVERFLOW PIPE (BY OTHERS)
12			PIPE COUPLING (BY OTHERS)

EQUIPMENT PERFORMANCE

The stormwater treatment unit shall adhere to the hydraulic parameters given in the chart below and provide the removal efficiencies and storage capacities as follows:

1. Performance objectives: The unit shall be capable of treating the peak flow rate listed below.
2. Peak treatment flow: 8.0 cfs [227 l/s]
3. Depth of flow in overflow pipe at 8.0 cfs: 11 in. [280mm]
4. Estimated headloss* at 8.0 cfs: 8 in. [204mm]
5. Sediment storage capacity: 2.10 Cu. yd. [1.61 cu.m.]
6. Oil storage capacity: 230 Gal. [871 liters]
7. Sediment shall be stored in a zone that is isolated from the main flow path and protected from reintrainment by a benching skirt.

*Headloss is defined as the difference between static water level at the inlet of the Downstream Defender to the free water surface in the overflow pipe, assuming free discharge.

Dimensions are general and intended for guidance only. The orientation of the inlet pipe and overflow pipe can be adjusted to site requirements. See site plan for orientation.

©2005 Hydro International

Any warranty made by Hydro International only applies to those items supplied by it. Hydro International does not accept and expressly disclaims any responsibility or liability for any structure, plant or equipment (or the performance thereof) designed, built, manufactured or supplied by any third-party. Hydro International has a policy of continuous product development and reserves the right to amend the specifications of any of its products or equipment at any time. Hydro International expressly disclaims any liability for the performance of its equipment (or any part thereof) used or made subject to conditions outside of the conditions set forth in Hydro International's design specifications. Hydro International owns the copyright in and to this drawing, which is supplied in confidence, and all intended recipients of the drawing, by their use thereof, agree to hold the drawing in confidence and not to use it for any purpose other than for which it was supplied and not reproduce, in whole or in part, the drawing or any of the equipment or structures depicted therein, without prior written permission of Hydro International.

Rev	By	Date	Description
	EPL	05/19/05	PROPOSAL

Date 05/19/05	Scale NTS
Drawn by EPL	Checked Eng.
Checked Prod.	Approved by

Title
6-FT DIA. [1829mm] DOWNSTREAM DEFENDER

STANDARD UNIT

GENERAL ARRANGEMENT

Hydro International

94 Hutchins Drive
Portland, Maine 04102
tel: (207) 756-6200
fax: (207) 756-6212
email: hiltech@hil-tech.com

CAD Ref: 6GA1
Project No.
Drawing No. 6GA1 Rev.

4

NOTES:
PROPOSED WATER SERVICE BELOW PROPOSED SEWER LINE WITH 18" MINIMUM SEPARATION.

GRANULAR MATERIAL TO BE COMPACTED TO 95% OF STANDARD PROCTOR MAXIMUM DENSITY.

GUIDELINES:

1. IF SELECT GRANULAR BACKFILL EXISTS; REMOVE WITHIN WIDTH OF PROPOSED SEWER TRENCH AND REPLACE WITH SELECT EXCAVATED MATERIAL AND COMPACT.
2. OMIT SELECT GRANULAR CRADLE AND GRANULAR BACKFILL TO ONE (1) FOOT OVER TOP OF PIPE AND USE SELECT EXCAVATED MATERIAL AND COMPACT FOR 10 FEET ON EITHER SIDE OF WATER MAIN
3. A. CONSTRUCT 10 FEET OF PROPOSED SEWER OF WATER MAIN MATERIAL AND PRESSURE TEST, OR;
   B. USE 10 FEET OF CASING FOR PROPOSED SEWER AND SEAL ENDS OF CASING.
4. POINT LOADS SHALL NOT BE ALLOWED BETWEEN SEWER OR SEWER CASING AND WATER MAIN.
5. PROVIDE ADEQUATE SUPPORT FOR EXISTING WATER MAIN TO PREVENT DAMAGE DUE TO SETTLEMENT OF SEWER TRENCH.

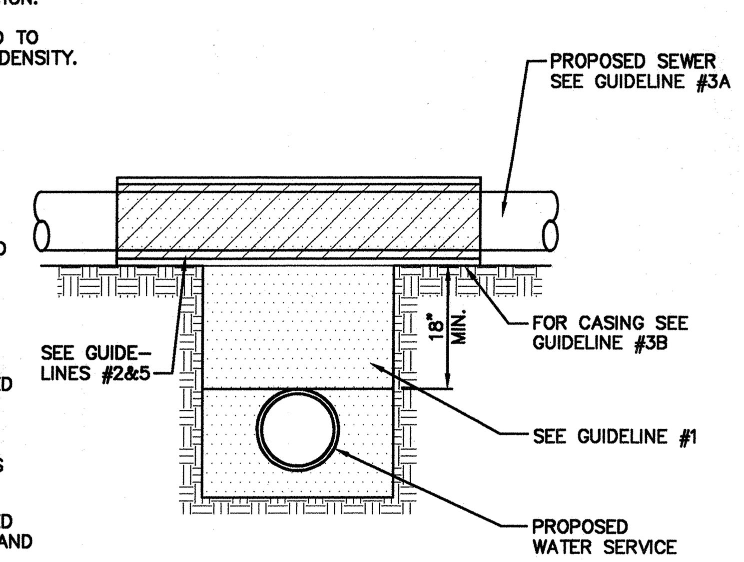

WATER & SEWER TRENCH SEPARATOR

N.T.S.

16

KEYED NOTES

1. EXCAVATE WIDTH OF TRENCH AS NEEDED
2. PLACE SUITABLE SOIL OR GRANULAR BACKFILL IN 6" MAX. LIFTS COMPACTED TO 90% MIN. (98% MIN. UNDER PAVEMENT) DRY DENSITY PER ASTM D698 OR 75% (80% UNDER PAVEMENT) RELATIVE DENSITY, PER ASTM D4353. GRANULAR BACKFILL REQUIRED UNDER PAVEMENT.
3. PROPOSED STORM OR SANITARY SEWER
4. TOPSOIL, SOD, AND MULCHING OR PAVEMENT AS DETAILED ELSEWHERE.
5. NO. 57 OR NO. 67 AGGREGATE PLACED A MINIMUM OF 12" ABOVE THE TOP OF THE PIPE
6. NO. 57 OR NO. 67 AGGREGATE PLACED A MINIMUM OF 6" BELOW THE BOTTOM OF THE PIPE

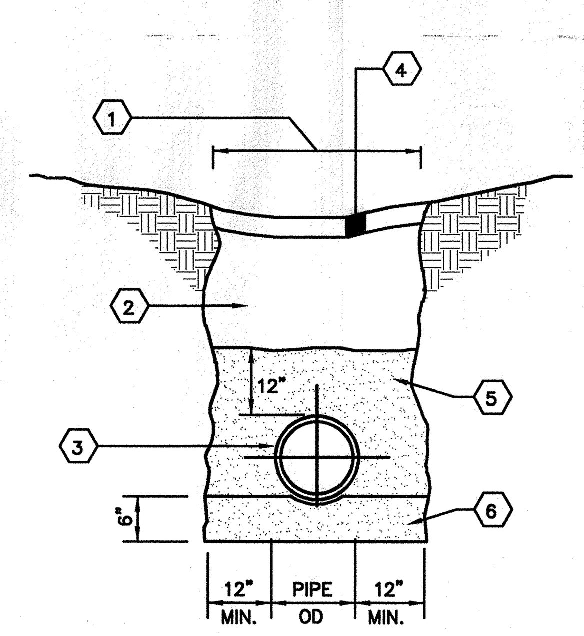

SEWER TRENCH

N.T.S.

12

REVISIONS

DATE	DESCRIPTION	BY
10.2.08	SUFFICIENCY REVIEW COMMENTS SWGR T20080090	

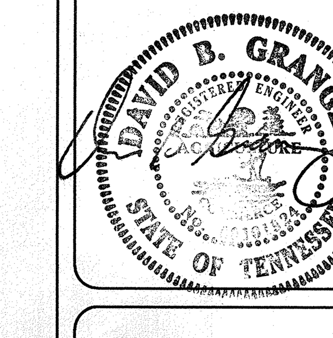

THORNTONS
1001 LINN STATION ROAD, SUITE 200, LOUISVILLE, KY. 40223 502-425-8022

MYATT DRIVE AND ANDERSON LANE
MADISON, TN

DETAILS

DESIGN: K.J.B.
SCALE: AS NOTED
DRAFTING: D.J.H.
DATE: 6-18-08

GLAUS PYLE SCHOMER BURNS & DEHAVEN INC.
GPD ASSOCIATES
520 South Main Street, Suite 2531 Akron, Ohio 44311
330-572-2100, Fax 330-572-2101

PROJECT NO.
C-503

LANDSCAPE NOTES & PLANTING SPECIFICATIONS

SCOPE OF WORK

1. THIS WORK SHALL CONSIST OF PERFORMING CLEARING AND GRUBBING, SOIL PREPARATION, FINISH GRADING, PLANTING AND DRAINAGE, INCLUDING ALL LABOR, MATERIALS, TOOLS, EQUIPMENT, AND ANY OTHER APPURTENANCES NECESSARY FOR THE COMPLETION OF THIS PROJECT.
2. QUANTITY TAKEOFF IS SUPPLIED FOR CONTRACTOR'S ASSISTANCE ONLY. CONTRACTOR IS RESPONSIBLE FOR SUPPLYING ALL PLANT MATERIALS AS PER PLAN.
3. NO ADDITIONAL COMPENSATION SHALL BE PAID TO THE CONTRACTOR FOR DAMAGE AND REPAIR WITHIN EASEMENT OR RIGHT-OF-WAY LIMITS.

PRESERVATION/PROTECTION (IF APPLICABLE)

1. CONTRACTOR SHALL MAINTAIN AND PRESERVE TREES AND SHRUBS NOT BEING REMOVED, INCLUDING THEIR ROOTS. TREE PROTECTION FENCING SHALL BE USED AT THE DRIP LINE OF ALL TREES AND SHRUBS WITHIN 50 FEET OF CONSTRUCTION EXCEPT AS SHOWN ON PLAN. FENCING SHALL REMAIN IN PLACE UNTIL FINAL PLANT INSPECTION FOLLOWING CONSTRUCTION. MATERIALS SHALL NOT BE STOCKPILED WITHIN THIS DEFINED AREA AND VEHICLES AND OTHER EQUIPMENT SHALL BE OPERATED TO AVOID SOIL COMPACTION.
2. FEEDER ROOTS SHOULD NOT BE CUT IN AN AREA EQUAL TO TWICE THE TREE CIRCUMFERENCE (MEASURED 6" ABOVE THE GROUND LINE IN INCHES) EXPRESSED IN FEET. (EXAMPLE: A CIRCUMFERENCE OF 10" WOULD HAVE A 'NO CUT' ZONE OF 20 FEET IN ALL DIRECTIONS FROM THE TREE). THIS SHOULD APPLY TO UTILITY SERVICES, IF FEASIBLE. THE ONLY EXCEPTION TO THIS REQUIREMENT WILL BE THOSE SPECIFICALLY ALLOWED BY THE LANDSCAPE ARCHITECT, SPECIFICATIONS OR AS INDICATION ON THE PLANS.
3. TREE TRUNKS AND EXPOSED ROOTS DAMAGED DURING EQUIPMENT OPERATIONS SHALL BE TREATED IN ACCORDANCE WITH THE ARBOR CULTURAL STANDARDS OF THE CITY.

PLANT MATERIALS

1. GENERAL – ALL MATERIALS SHALL BE OF ITS KIND AVAILABLE AND SHALL HAVE BEEN GROWN IN A CLIMATE SIMILAR TO THAT ON SITE.
2. PLANTS – ALL PLANTS SHALL BE HEALTHY, OF NORMAL GROWTH, WELL ROOTED, FREE FROM DISEASE AND INSECTS. QUALITY AND SIZE OF PLANT MATERIAL SHALL CONFORM TO ANSI Z60.1 "AMERICAN STANDARDS FOR NURSERY STOCK".
3. VARIETIES AND SIZES OF PLANTS SHALL BE AS SHOWN ON DRAWINGS.
4. PLANTS SHALL BE IN A HEALTHY, VIGOROUS CONDITION, FREE OF DEAD OR BROKEN BRANCHES, SCARS THAT ARE NOT COMPLETELY HEALED, FROST CRACKS, DISFIGURING KNOTS, BROKEN OR ABRADED BARK, REDUNDANT LEADERS OR BRANCHES, OR ABERRATIONS OF ANY KIND. PLANTS SHALL NOT HAVE MULTIPLE LEADERS, UNLESS THIS IS THE NATURAL FORM.
5. BALLED AND BURLAPPED (B&B) PLANTS SHALL BE DUG WITH A FIRM ROOT BALL OF NATURAL EARTH, OF A SIZE IN PROPORTION TO THE PLANT'S SIZE, AS MEASURED BY CALIPER, HEIGHT, OR SPREAD. BALLED AND BURLAPPED PLANTS SHALL BE HANDLED ONLY BY THE ROOT BALL, NOT BY THE TRUNK OR BRANCHES, AS THIS MAY BREAK OR LOOSEN THE ROOT BALL AND DAMAGE THE ROOT SYSTEM. CONTAINER PLANTS SHALL HAVE BEEN ESTABLISHED FOR A MINIMUM OF ONE FULL GROWING SEASON IN THEIR CONTAINERS BEFORE INSTALLATION. CONTAINER PLANTS SHALL BE HANDLED ONLY BY THE CONTAINER, NOT BY THE STEMS OR BRANCHES, AS THIS MAY PULL THE PLANT OUT OF THE CONTAINER AND BREAK OR LOOSEN THE ROOT BALL AND DAMAGE THE ROOT SYSTEM. BARE-ROOT SHRUBS AND GROUND COVER PLANTS ARE ACCEPTABLE, IF THEY ARE DUG AND INSTALLED AT THE APPROPRIATE SEASON AND HANDLED IN THE APPROPRIATE MANNER.
6. PLANTS SHALL BE PROTECTED FROM DRYING OUT DURING SHIPPING WITH TARPAULINS OR OTHER COVERINGS. PLANTS SHALL BE PROTECTED FROM DRYING OUT AFTER DELIVERY BY PLANTING IMMEDIATELY; IF THIS IS NOT POSSIBLE, THE ROOT BALL SHALL BE COVERED WITH PEAT MOSS OR EARTH, AND WATERED FREQUENTLY TO KEEP IT MOIST UNTIL PLANTING.
7. DO NOT HANDLE, MOVE, BIND, TIE OR OTHERWISE TREAT PLANTS SO AS TO DAMAGE THE ROOT BALL, ROOTS, TRUNK, OR BRANCHES IN ANY WAY.

TOPSOIL

1. TOPSOIL HAS BEEN (OR WILL BE) STOCKPILED FOR REUSE IN LANDSCAPE WORK. IF QUANTITY OF STOCKPILED TOPSOIL IS INSUFFICIENT, PROVIDE ADDITIONAL TOPSOIL AS REQUIRED TO COMPLETE LANDSCAPE WORK. IMPORTED TOPSOIL SHALL CONSIST OF LOOSE, FRIABLE, LOAMY TOPSOIL WITHOUT ADMIXTURE OF SUBSOIL OR REFUSE. ACCEPTABLE TOPSOIL SHALL CONTAIN NOT LESS THAN 3 PERCENT NOR MORE THAN 20 PERCENT ORGANIC MATTER.
2. PLANTING BACKFILL FOR PARKING LOT ISLANDS SHALL CONSIST OF A HOMOGENEOUS MIXTURE OF 3 PARTS TOPSOIL TO ONE PART SPHAGNUM PEAT INSTALLED OVER A 6" THICKNESS OF NO. 57 AGGREGATE.

SOIL CONDITIONING

1. OBTAIN LABORATORY ANALYSIS OF STOCKPILED AND IMPORTED TOPSOIL COMPLETE WITH RECOMMENDATIONS FOR SOIL AMENDMENT.
2. BEFORE MIXING, CLEAN TOPSOIL OF ROOTS, PLANTS, SOD, STONES, CLAY LUMPS, AND OTHER EXTRANEOUS MATERIALS HARMFUL OR TOXIC TO PLANT GROWTH.
3. MIX SPECIFIED SOIL AMENDMENTS AND FERTILIZERS WITH TOPSOIL AT RATES SPECIFIED BY THE LAB REPORT. DELAY MIXING OF FERTILIZER IF PLANTING WILL NOT FOLLOW PLACING OF PLANTING SOIL WITHIN A FEW DAYS.
4. FOR PLANTING BEDS AND LAWNS, MIX PLANTING SOIL EITHER PRIOR TO PLANTING OR APPLY ON SURFACE OF TOPSOIL AND MIX THOROUGHLY BEFORE PLANTING. MIX LIME WITH DRY SOIL PRIOR TO MIXING OF FERTILIZER.
5. PREVENT LIME FROM CONTACTING ROOTS OF ACID-LOVING PLANTS.
6. APPLY PHOSPHORIC ACID FERTILIZER (OTHER THAN THAT CONSTITUTING A PORTION OF COMPLETE FERTILIZERS) DIRECTLY TO SUBGRADE BEFORE APPLYING PLANTING SOIL AND TILLING.

OTHER MATERIALS

1. BED EDGING – TRENCH AROUND LANDSCAPE BEDS TO CREATE SHARP, 45 DEGREE EDGE. TYPICAL AT ALL PLANTING BED EDGES WHERE THEY MEET LAWNS.
2. MULCH: ORGANIC MULCH FREE FROM DELETERIOUS MATERIALS AND SUITABLE FOR TOP DRESSING OF TREES, SHRUBS, OR PLANTS AND CONSISTING OF THE FOLLOWING:

   * SHREDDED HARDWOOD BARK MULCH (ALL AREAS NOT BEING SEEDED) NOT LESS THAN 6 MO. AGED, TO BE CERTIFIED BY SUPPLIERS.
3. WEED BARRIER – POLYETHYLENE FILTER FABRIC DESIGNED TO PERMIT WATER INFILTRATION WHILE PREVENTING WEED GROWTH–TO BE INSTALLED IN ALL PLANTING BEDS.

GENERAL WORK PROCEDURES

1. LANDSCAPE WORK SHALL BE ACCORDING TO THE WORKMANLIKE STANDARDS ESTABLISHED FOR LANDSCAPE CONSTRUCTION AND PLANTING IN THE TENNESSEE STANDARDIZED LANDSCAPE SPECIFICATIONS (ASLA) AND ANY LOCAL LANDSCAPE ORDINANCES.
2. CONTRACTOR SHALL OBTAIN A COPY OF LOCAL ORDINANCES REGARDING ACCEPTABLE PLANT AND PLANTING DETAILS AND ABIDE BY THOSE ORDINANCES AND DETAILS.
3. ENGINEER RESERVES THE RIGHT TO REJECT ALL PLANT MATERIAL DEEMED NOT ACCEPTABLE.
4. ANY PROPOSED PLANT SUBSTITUTIONS SHALL BE EQUIVALENT IN FORM, HABIT, STRUCTURE, BRANCHING AND LEAF TYPE AND MUST BE ISSUED TO THE LANDSCAPE ARCHITECT FOR APPROVAL, IN WRITING, PRIOR TO INSTALLATION.

WEEDING

1. BEFORE AND DURING PRELIMINARY GRADING AND FINISH GRADING, ALL WEEDS AND GRASSES SHALL BE DUG OUT BY THE ROOTS AND DISPOSED OF AT THE CONTRACTOR'S EXPENSE.

PLANTING

1. POSITION TREES AND SHRUBS AT THEIR INTENDED LOCATIONS AS PER THE PLANS AND SECURE THE APPROVAL OF THE OWNER BEFORE EXCAVATING PITS, MAKING NECESSARY ADJUSTMENTS AS DIRECTED.
2. PLANTING PITS SHALL BE AS PER DETAILS.
3. PREPARED SOIL SHALL BE TAMPED FIRMLY AT BOTTOM OF PIT. FILL PREPARED SOIL AROUND BALL OF PLANT. COMPLETE BACKFILLING AND WATER THOROUGHLY.
4. PREPARE RAISED EARTH BASIN AS WIDE AS PLANTING HOLE OF EACH PLANT.
5. WATER IMMEDIATELY AFTER PLANTING. WATER SHALL BE APPLIED TO EACH TREE AND SHRUB IN SUCH MANNER AS NOT TO DISTURB BACKFILL AND TO THE EXTENT THAT ALL MATERIALS IN THE PLANTING HOLE ARE THOROUGHLY SATURATED.
6. INSTALL BED EDGING AND MULCH.
7. REMOVE ALL SALES TAGS, STRINGS, STRAPS, WIRE, ROPE OR OTHER MATERIALS THAT MAY INHIBIT PLANT GROWTH BOTH ABOVE AND BELOW THE SURFACE OF THE SOIL.
8. REMOVE ANY BROKEN, SUCKERING, DISEASED, CRISSCROSSED OR AESTHETICALLY DISPLEASING BRANCHES BACK TO LIVE LEADER OR SIDE LATERAL WITH A FLUSH CUT.
9. MULCH TREES AND SHRUBS AND OTHER AREAS NOTED ON THE PLANTING PLAN WITH A 3" LAYER OF MULCH AS SPECIFIED IN 6.B.

FINISH GRADING

1. ALL AREAS WILL BE GRADED BY THE CONTRACTOR TO SUBSTANTIALLY PLUS/MINUS 0.1 FOOT OF FINISH GRADE.
2. ALL LAWN AND PLANTING AREAS SHALL BE GRADED TO A SMOOTH, EVEN, UNIFORM PLANE WITH NO ABRUPT CHANGE OF SURFACE. SOIL AREAS ADJACENT TO THE BUILDINGS SHALL SLOPE AWAY FROM THE BUILDINGS.
3. ALL PLANTING AREAS SHALL BE GRADED AND MAINTAINED TO ALLOW FREE FLOW OF SURFACE WATER.
4. PARKING LOT ISLAND SHALL BE BACKFILLED AS PART OF THIS CONTRACT.

GROUND COVER

1. SPACING AND VARIETY OF GROUND COVER SHALL BE AS SHOWN ON DRAWINGS.
2. MULCH GROUND COVER WITH 2" THICKNESS OF SPHAGNUM PEAT.
3. IMMEDIATELY AFTER PLANTING GROUND COVER, CONTRACTOR SHALL THOROUGHLY WATER GROUND COVER.
4. ALL GROUND COVER AREAS SHALL BE TREATED WITH A PRE-EMERGENT BEFORE FINAL LANDSCAPE INSPECTION. GROUND COVER AREAS SHALL BE WEEDED PRIOR TO APPLYING PRE-EMERGENT. PRE-EMERGENT TO BE APPLIED AS PER MANUFACTURER'S RECOMMENDATION.

GUARANTEE

1. CONTRACTOR SHALL GUARANTEE ALL PLANTS FOR A PERIOD OF ONE (1) YEAR FROM DATE OF PROJECT ACCEPTANCE BY THE OWNER.

IRRIGATION

1. CONTRACTOR SHALL PROVIDE & INSTALL AN IRRIGATION SYSTEM TO PROVIDE 100% COVERAGE OF THE SITE. AREAS WITHIN 5 FEET OF BUILDING WALLS SHALL BE IRRIGATED BY DRIP IRRIGATION OR SIMILAR. CONTRACTOR SHALL ENSURE BUILDING WALLS AND WINDOWS WILL NOT BE DAMAGED OR STAINED BY IMPROPER IRRIGATION INSTALLATION OR POOR SELECTION OF FIXTURES. SYSTEM SHALL INCLUDE ALL APPURTENANCES & BE APPROVED BY OWNER.
2. IRRIGATION CONTRACTOR SHALL PROVIDE A METHOD FOR WINTERIZATION. WINTERIZATION SHALL BE PERFORMED BY CONTRACTOR UPON COMPLETION IF SYSTEM IS INSTALLED BETWEEN NOVEMBER 1 AND MARCH 31.

CLEANUP

1. UPON THE COMPLETION OF ALL PLANTING WORK AND BEFORE FINAL ACCEPTANCE, THE CONTRACTOR SHALL REMOVE ALL MATERIAL, EQUIPMENT, AND DEBRIS RESULTING FROM HIS WORK. AN 'ACCEPTABLE CONDITION' SHALL BE AS DEFINED AND APPROVED BY THE OWNER'S AUTHORIZED REPRESENTATIVE.

MAINTENANCE

(MAINTENANCE PERIOD TO COMMENCE AFTER FINAL INSPECTION.)

1. MAINTENANCE PERIOD FOR THIS CONTRACT SHALL BE 90 CALENDAR DAYS COMMENCING AFTER FINAL INSPECTION OF CONSTRUCTION.
2. MAINTAIN TREES, SHRUBS AND OTHER PLANTS BY PRUNING, CULTIVATING AND WEEDING AS REQUIRED FOR HEALTHY GROWTH. RESTORE PLANTING SAUCERS. RESET TREES AND SHRUBS TO PROPER GRADES OR VERTICAL POSITION AS REQUIRED.
3. MAINTAIN LAWNS BY WATERING, MOWING, TRIMMING, AND OTHER OPERATIONS SUCH AS ROLLING, REGRADING AND REPLANTING AS REQUIRED TO ESTABLISH A SMOOTH, ACCEPTABLE LAWN, FREE OF ERODED OR BARE AREAS.
4. MAINTAIN THE LANDSCAPING BY KEEPING ALL PLANTS DISEASE-FREE AND PLANTING BEDS GROOMED, EXCEPT IN NATURALLY OCCURRING VEGETATION AREAS.
5. REPLACE ANY REQUIRED PLANTING(S), WHICH SEVERELY DECLINE OR DIE AFTER THE DATE OF PLANTING. SUCH REPLACEMENT SHALL OCCUR DURING THE NEXT APPROPRIATE PLANTING SEASON.

SEEDING

1. GRASS SEED SHALL BE FRESH, CLEAN, DRY, NEW-CROP SEED COMPLYING WITH THE ASSOCIATION OF OFFICIAL SEED ANALYSTS' "RULES FOR TESTING SEEDS" FOR PURITY AND GERMINATION TOLERANCES.
2. ALL AREAS TO BE SEEDED SHALL RECEIVE NO LESS THAN FIVE POUNDS OF SEED PER ONE THOUSAND SQUARE FEET. APPLY SEED AND PROTECT WITH STRAW MULCH AS REQUIRED FOR NEW LAWNS. GRASS SEED MIX SHALL CONSIST OF THE FOLLOWING:

PROPORTION	NAME	MIN.% GERM.	MIN.% PURE SEED	MAX.% WEED SEED
30%	KENTUCKY BLUEGRASS (POA PRATENSIS)	80	85	0.50
30%	CREEPING RED FESCUE (FESTUCA RUBRA)	85	98	0.50
20%	PERENNIAL RYE GRASS (LOLIUM PERENNE)	90	98	0.50
20%	ANNUAL RYEGRASS (LOLIUM MULTIFLORUM)	85	92	1.00

SODDING

1. SOD SHALL BE FIRST GRADE CERTIFIED KENTUCKY BLUEGRASS BLEND CONTAINING NOT MORE THAN 30 PERCENT OF OTHER GRASSES AND CLOVERS, AND FREE FROM ALL NOXIOUS WEEDS. SOD SHALL BE RECENTLY MOWED TO A HEIGHT OF NOT LESS THAN 3 INCHES. IT SHALL BE CUT INTO STRIPS OF NOT LESS THAN 3 FEET AND NOT OVER 6 FT. WITH A UNIFORM WIDTH OF NOT OVER 24 INCHES. THE SOD SHALL BE CUT TO A DEPTH EQUAL TO THE GROWTH OF THE FIBROUS ROOTS BUT IN NO CASE LESS THAN 1 INCH. SOD SHALL BE DELIVERED TO THE JOB WITHIN 24 HOURS AFTER BEING CUT AND SHALL BE INSTALLED WITHIN 48 HOURS AFTER BEING CUT. BEFORE SOD IS PLACED, THE SOD BED WILL HAVE BEEN EXCAVATED TO SUCH A DEPTH THAT WHEN THE SOD IS IN PLACE THE TOP OF THE SOD WILL BE FLUSH WITH THE SURROUNDING GRADE. NO SOD SHALL BE PLACED WHEN THE TEMPERATURE IS BELOW 32 DEGREES F. NO FROZEN SOD SHALL BE PLACED NOR SHALL ANY SOD BE PLACED ON FROZEN SOIL. WHEN SOD IS PLACED BETWEEN THE DATES OF JUNE 1ST AND OCTOBER 15th, IT SHALL BE COVERED IMMEDIATELY WITH A STRAW MULCH 1 INCH THICK (LOOSE MEASUREMENT). AFTER LAYING, THE SOD SHALL BE WATERED THOROUGHLY AND TAMPED WITH APPROVED SOD TAMPERS SUFFICIENTLY TO BRING THE SOD INTO CLOSE CONTACT WITH THE SOD BED AND INSURE TIGHT JOINTS BETWEEN THE SECTIONS OR STRIPS. THE CONTRACTOR SHALL KEEP ALL SODDED AREAS INCLUDING SUBGRADE, THOROUGHLY MOIST FOR 30 DAYS AFTER SODDING. THE CONTRACTOR SHALL REPAIR ANY AREAS DAMAGED FOLLOWING INSTALLATION AS DIRECTED BY THE ENGINEER. SOD SHALL BE IN PLACE AT LEAST 30 DAYS BEFORE FINAL ACCEPTANCE.

PLANTING SCHEDULE

1. ALL PLANTING IS RECOMMENDED TO BE DONE WITHIN THE FOLLOWING DATES. WHEN PLANTING OUTSIDE THESE DATES, WRITTEN DOCUMENTATION SHALL BE PROVIDED THAT SURVIVAL OR REPLACEMENT WILL BE ENSURED. NO PLANTING SHALL BE DONE IN FROZEN SOIL.

NORMAL PLANTING SEASONS	SPRING	FALL
ALL TREES AND SHRUBS		
EVERGREENS	MARCH 15–MAY 15	OCTOBER 1–DECEMBER 1
GROUNDCOVERS	APRIL 1–MAY 15	OCTOBER 1–NOVEMBER 15
SEED AND MULCH	APRIL 1–JUNE1	WHEN SOD IS WORKABLE
	APRIL 1–MAY 15	OCTOBER 1–NOVEMBER 15

GENERAL NOTE

1. ALL AREAS DISTURBED BY CONSTRUCTION THAT ARE WITHIN THE RIGHT-OF-WAY SHALL BE FINE GRADED TO MAINTAIN POSITIVE DRAINAGE, HAVE A 6" LAYER OF TOPSOIL APPLIED AND BE SEEDED ACCORDING TO SPECIFICATIONS ON THIS SHEET.

REVISIONS

DATE	DESCRIPTION	BY
10.2.08	SUFFICIENCY REVIEW COMMENTS SWGR T200800190	

DAVID B. GRANGER
REGISTERED ENGINEER
AGRICULTURE
No. 101224
STATE OF TENNESSEE

THORNTONS
1010 LINN STATION ROAD, SUITE 200, LOUISVILLE, KY. 40223 502-425-8022

MYATT DRIVE AND ANDERSON LANE
MADISON, TN

LANDSCAPE SPECIFICATIONS

GLAUS PYLE SCHOMER BURNS & DEHAVEN INC.
GPD ASSOCIATES
520 South Main Street, Suite 2531 Akron, Ohio 44311
330-572-2100, Fax 330-572-2101

DESIGN: M.A.R. | DRAFTING: M.A.R.
SCALE: NO SCALE | DATE: 6-18-08

PROJECT NO.
L-001

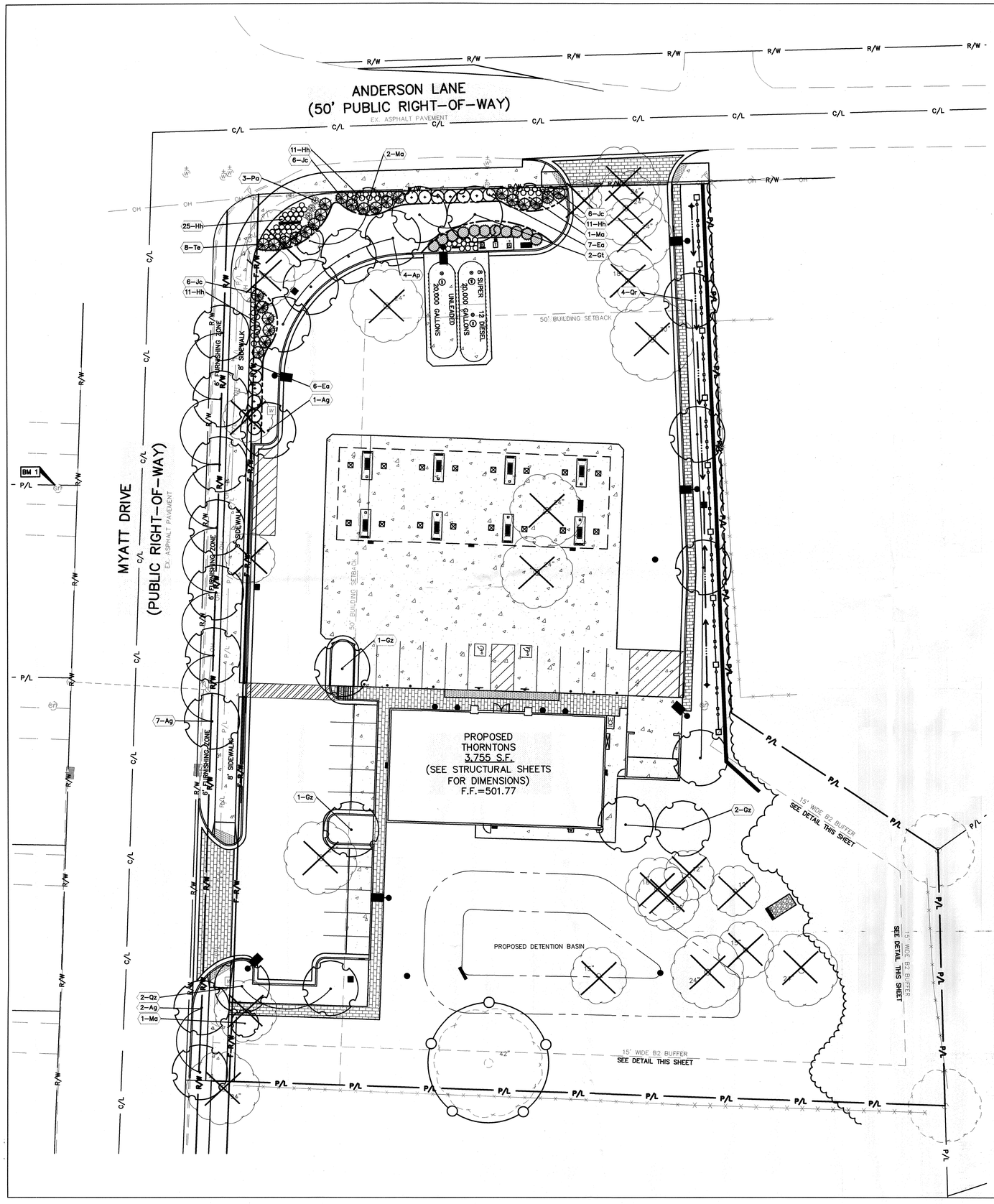

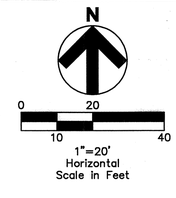

LEGEND

(SEE SHEET C-001 FOR GENERAL LEGEND)

- ##-Xx — PLANT QUANTITY AND SYMBOL
- TRENCHED EDGE
- TREE/SHRUB
- TREE TO BE REMOVED
- 000 — PROPOSED DETENTION BASIN

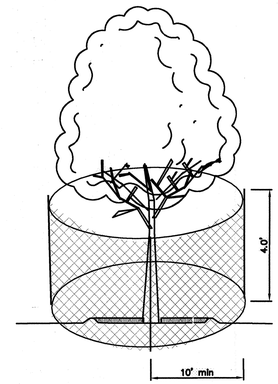

4' TALL CHAINLINE FENCE INSTALL AT DRIPLINE OR MIN. 10' RADIUS.

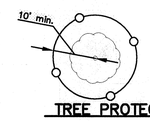

DENOTES TREE PROTECTION FENCING ON THE PLAN.

TREE PROTECTION DETAIL N.T.S.

TREE DENSITY WORKSHEET (ORDINANCE 94-1104)

MAP 43-7, PARCEL ____
APPLICATION NUMBER ____
PERMIT NUMBER ____
PROJECT NAME THORNTONS
ADDRESS ____

1. ACREAGE (AREA OF BUILDING SITE) = 1.80 Ac./78,272 S.F.
2. MINUS BUILDING, CANOPY & DUMPSTER COVERAGE AREA = 9,224 S.F.
3. EQUALS ADJUSTED ACREAGE = 1.59 Ac./69,048 S.F.
4. MULTIPLIED BY REQUIRED DENSITY UNITS PER ACRE x 14
5. EQUALS REQUIRED TREE DENSITY UNITS FOR PROJECT = 22.26

PROTECTED TREES: (existing trees 8" DBH or larger)
DBH (diameter at breast height)

Example: 3 trees 8" DBH x 0.4 = 1.2 density units

___ 6" DBH x 0.2 = ___	___ 26" DBH x 5.6 = ___	___ 44" DBH x 21.1 = ___
___ 8" DBH x 0.4 = ___	___ 28" DBH x 6.5 = ___	___ 46" DBH x 23.1 = ___
___ 10" DBH x 0.6 = ___	___ 30" DBH x 7.4 = ___	___ 48" DBH x 25.1 = ___
___ 12" DBH x 0.8 = ___	___ 32" DBH x 8.4 = ___	___ 50" DBH x 27.3 = ___
___ 14" DBH x 1.1 = ___	___ 34" DBH x 9.5 = ___	___ 52" DBH x 29.5 = ___
___ 16" DBH x 1.4 = ___	___ 36" DBH x 10.7 = ___	___ 54" DBH x 31.8 = ___
___ 18" DBH x 1.8 = ___	___ 38" DBH x 11.9 = ___	___ 56" DBH x 34.2 = ___
___ 20" DBH x 3.3 = ___	___ 40" DBH x 17.4 = ___	___ 58" DBH x 36.7 = ___
___ 22" DBH x 3.9 = ___	1 42" DBH x 19.2 = 19.2	___ 60" DBH x 39.3 = ___
___ 24" DBH x 4.7 = ___		

Total density units for protected trees = 19.2

REPLACEMENT TREES: (new trees to be planted)
CAL (caliper inches of new tree)

Example: 4 trees 1" CAL x 0.4 = 1.6 density units

42 2" CAL x 0.5 = 21.0	___ 6" CAL x 1.0 = ___	___ 10" CAL x 1.7 = ___
___ 3" CAL x 0.6 = ___	___ 7" CAL x 1.2 = ___	___ 11" CAL x 1.9 = ___
___ 4" CAL x 0.7 = ___	___ 8" CAL x 1.3 = ___	___ 12" CAL x 2.1 = ___
___ 5" CAL x 0.9 = ___	___ 9" CAL x 1.5 = ___	___ 14" CAL x 2.3 = ___

Total density units for replacement trees = 21.0

DENSITY UNITS PROVIDED ON ABOVE SCHEDULES:

Total density units for protected trees = 19.2
Total density units for new trees = 21.0
Total density units provided = 40.2

NOTE:
THE TOTAL DENSITY UNITS PROVIDED MUST EQUAL OR EXCEED THE REQUIREMENTS OF ITEM NUMBER 5 ABOVE.

PLANT LIST –

Symbol	Botanical Name	Common Name	Qty.	Size (Cal. / Ht.)	Condition	Remarks
Ac	Amelanchier canadensis	Shadblow Serviceberry	3	6' H / multi stem	B&B	Matched
Ag	Acer ginalla 'Flame'	Flame Amur Maple	10	2.0" cal. / 8' H	B&B	Matched
Ea	Euonymus alata 'Compacta'	Compact Burning Bush	38	No. 5	Cont.	5' o/c
Gt	Gleditsia triacanthos inermis 'Skycole'	Skyline Honey Locust	2	2.0" cal. / 12' H	B&B	Matched
Hh	Hemerocallis Stella D'Oro	Stella D'Oro Daylily	58	No. 1	Cont.	18" o/c
Jc	Juniperus chinensis 'Sea Green'	Sea Green Juniper	46	24"	Cont.	6' o/c
Ma	Malus 'sargentii'	Sargent Crab	8	2" cal / 6' H	B&B	Specimen
Pa	Pennisetum alopecuroides 'Hameln'	Hameln Fountain Grass	3	No. 2	Cont.	3' o/c
Gz	Zelkova serrata	Green Vase Zelkova	15	2.0" cal. / 12' H	B&B	As shown
Qr	Quercus rubra	Red Oak	13	2.0" cal. / 12' H	B&B	Matched
Sj	Spiraea japonica 'Neon Flash'	Neon Flash Spiraea	20	No. 3	Cont.	3' o/c
Te	Taxus x. media 'Everlow'	Everlow Yew	8	No. 3	Cont.	4' o/c

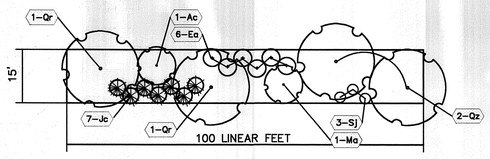

TYPE B-2 BUFFER YARD

4 CANOPY TREES
1.6 UNDERSTORY TREES
16 SHRUBS

TOTAL BUFFERYARD LENGTH IS 453' WHICH WILL REQUIRE
18 CANOPY TREES,
7 UNDERSTORY TREES AND
73 SHRUBS

BENCHMARKS:

HORIZONTAL COORDINATES AND VERTICAL DATA, NAVD 88, BASED UPON AN OPUS SOLUTION NOVEMBER 7, 2007.

BENCHMARK #1 – TOP OF COVER OF A SANITARY SEWER MANHOLE LOCATED S 87°05'51" W, A DISTANCE OF 66.92 FEET FROM THE SOUTHWEST CORNER OF TRACT 2, LOT 32 ARCHWOOD ACRES SUBDIVISION SECTION 2.
ELEVATION=502.66

TENNESSEE ONE CALL SYSTEM, INC.

STOP-CALL BEFORE YOU DIG!
THREE FULL WORKING DAYS BEFORE YOU DIG, CALL
1-(800)-351-1111

REVISIONS

DATE	DESCRIPTION	BY
10.2.08	SUFFICIENCY REVIEW COMMENTS (RWO# 1200000080)	

DAVID B. GRANGER
REGISTERED ENGINEER
CIVIL
No. 19
STATE OF TENNESSEE

THORNTONS
9300 LAW STATION ROAD, SUITE 500A, LOUISVILLE, KY. 40228 (502) 968-9000

MYATT DRIVE AND ANDERSON LANE
MADISON, TN

LANDSCAPE PLAN

DRAFTING: M.A.R.
DESIGN: M.A.R.
DATE: 6-18-08
SCALE: 1"=20'

CLAUS PYLE SCHOMER BURNS & DEHAVEN INC.
GPD ASSOCIATES
320 South Main Street, Suite 331 Akron, Ohio 44311
330-572-2100 / fax 330-572-2101

PROJECT NO.
L-101

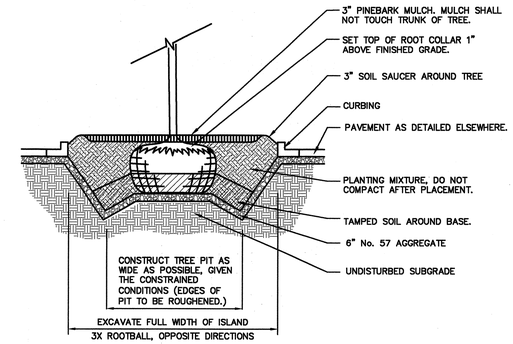

PARKING LOT ISLAND PLANTING

N.T.S.

5

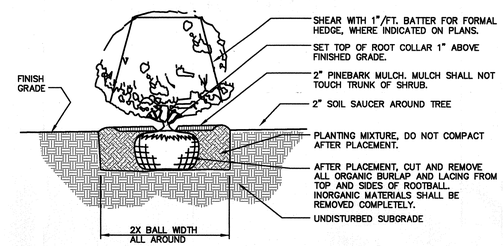

SHRUB PLANTING

N.T.S.

6

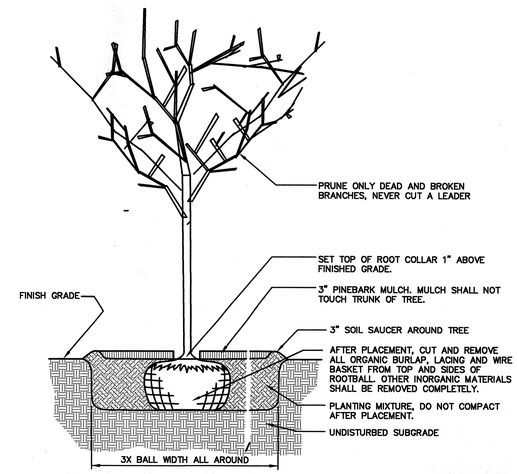

TREE PLANTING

N.T.S.

2

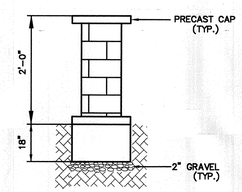

2' HIGH MASONRY KNEE WALL

N.T.S.

7

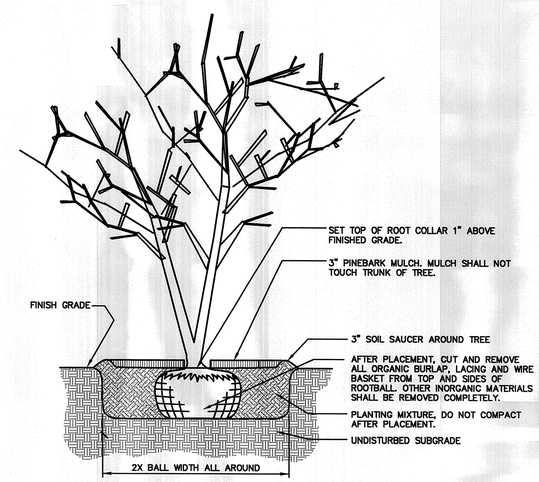

MULTISTEM TREE PLANTING

N.T.S.

4

13 9 14 10 15 11 16 12 8

REVISIONS

DATE	DESCRIPTION	BY
5.5.08	SUFFICIENCY REVIEW COMMENTS DWGS T200000060	

DAVID B. GRANGER
REGISTERED LANDSCAPE ARCHITECT
STATE OF TENNESSEE

THORNTONS
10201 LINN STATION ROAD, SUITE 200A, LOUISVILLE, KY. 40223 502-495-0022

MYATT DRIVE AND ANDERSON LANE
MADISON, TN

LANDSCAPE DETAILS

DESIGN: M.A.R.
DRAFTING: M.A.R.
SCALE: AS NOTED
DATE: 6-18-08

GLAUS PYLE SCHOMER BURNS & DEHAVEN INC.
CPD ASSOCIATES
339 Bond Street, Akron, Ohio 44311
330-572-2100, Fax 330-572-2101

PROJECT NO.
L-501

SITE #604

MADISON, TN

NOT TO SCALE

115.0 TOTAL SQ FT

NASHVILLE & DAVIDSON COUNTY
JUL 01 2008
METROPOLITAN PLANNING DEPARTMENT

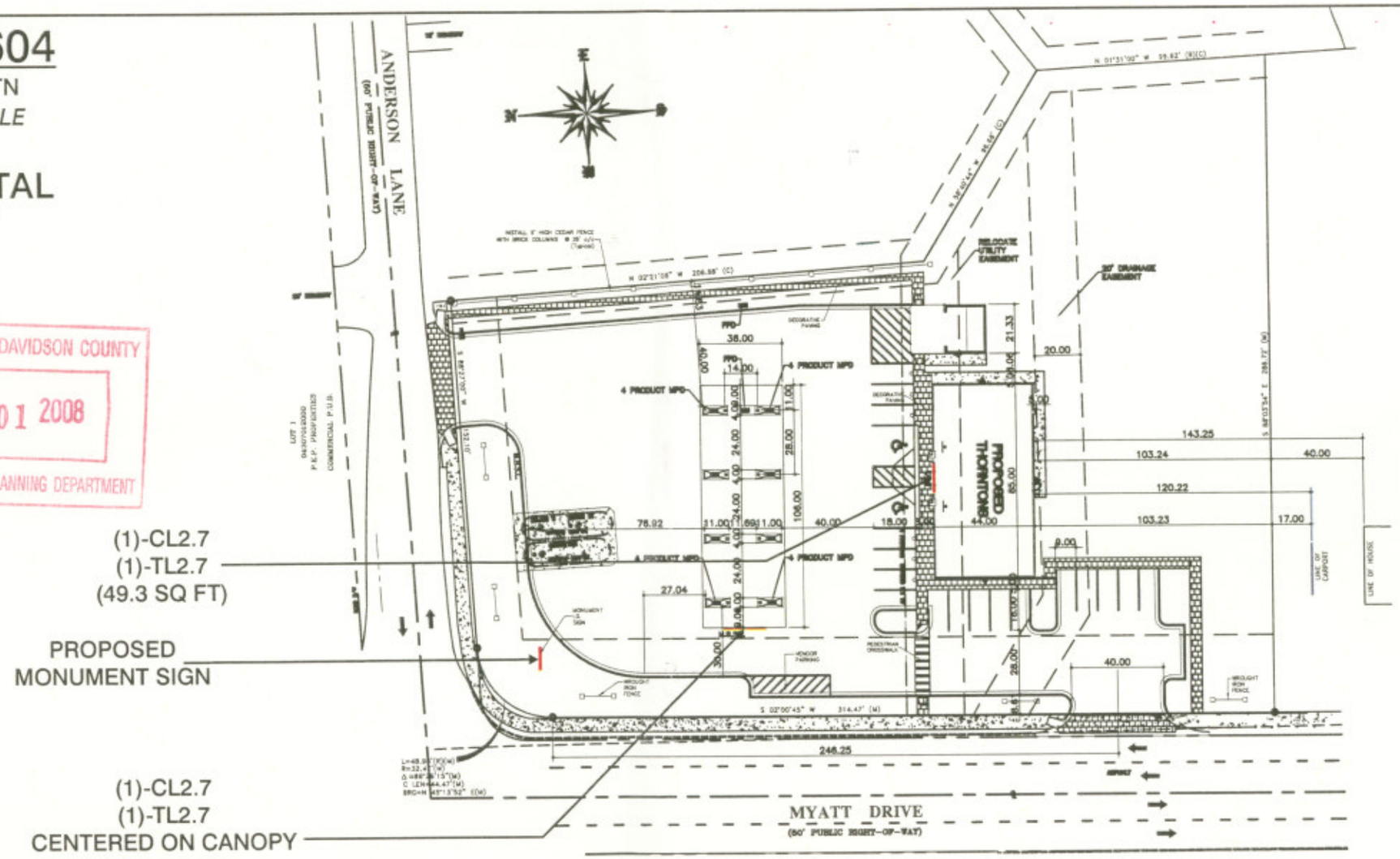

Sign Plan Approved with conditions.
See staff report 8/14/08

MC SIGN COMPANY
8959 TYLER BLVD.
MENTOR, OHIO 44060
PH. 440-209-6200 FAX 440-209-6277

CLIENT:	THORNTONS
ADDRESS:	SITE #604 317 MYATT DR. MADISON, TN 37115
TICKET NUMBER:	116560-1
DATE:	11-6-07
PROJECT MANAGER:	MATTHEW MINGEE
DESIGNER:	TS
ELECTRONIC FILE LOCATION:	THORNTONS/LOCATIONS/
ELECTRONIC FILE NAME:	#604 MADISON, TN
SQUARE FOOTAGE:	
SCALE:	NTS
REV:	#1 11-27-07, #2 6/26/08, #3, #4, #5, #6, #7, #8, #9
COMMENTS:	

Sign On.™
Partner with the best.

CLIENT SIGNATURE & APPROVAL DATE:

NOTICE: PRINTS ARE THE EXCLUSIVE PROPERTY OF "MC SIGN COMPANY" ANY UN-AUTHORIZED USE OR DUPLICATION WILL RESULT IN A 20% CHARGE PER OCCURRENCE PER THE VALUE OF THE DISPLAY© MC SIGN CO. 1998

STORE FRONT

CL 2.7 - 1103 -1103 Thorntons CL 2'-7"

.050 ALUMINUM TAB-
PAINTED WHITE W/
"FIRE RED" VINYL
COPY TO 2" HT.
TAB TO BE 2.5" x 4"
W/ 1.625" WIDE CONNECTOR

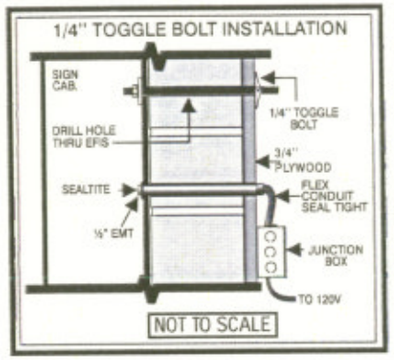

A	Disconnect switch
B	Mounting varies
C	Primary electrical source
D	Metal box to house power supply
E	2 Electronic LED power supply #3
F	.5" (.040) Alum. return Grip Guard paint: white
G	1" Red jewelite trim cap (To match Grip Flex flame red #585)
H	⅛" Clear acrylic painted Grip Flex flame red #585
I	Pb3 or black plastic bushings
J	Weep holes
K	Red LED lighting
L	1" Blue trim cap (to match PMS#287)
M	1/8" Blue acrylic to match PMS#287
N	Blue LED lighting

GRIP FLEX #585 FLAME RED

PMS 287 BLUE

Letter Cross Section Detail

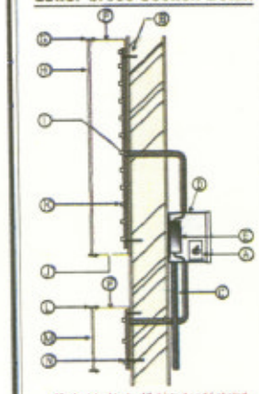

All electrical to be UL Listed and Labeled

INTERNAL CLOSE-UP OF SPLICE

NOTE: ALL STOREFRONT DIMENSIONS & FIELD VERIFY DIMENSION PRIOR TO FABRICATION

FRONT ELEVATION

SCALE: 1/4" = 1'-0"

1 A-3.0

MC SIGN COMPANY
8959 TYLER BLVD.
MENTOR, OHIO 44060
PH. 440-209-6200 FAX 440-209-6277

CLIENT:	THORNTONS
ADDRESS:	SITE #604 317 MYATT DR. MADISON, TN 37115
TICKET NUMBER:	116560-2
DATE:	11-6-07
PROJECT MANAGER:	MATTHEW MINGEE
DESIGNER:	TS
ELECTRONIC FILE LOCATION:	THORNTONS/LOCATIONS/
ELECTRONIC FILE NAME:	#604 MADISON, TN
SQUARE FOOTAGE:	38.1'
SCALE:	3/8" = 1'-0"
REV:	#1 #2 #3 #4 #5 #6 #7 #8 #9
COMMENTS:	

Sign On.™
Partner with the best.

CLIENT SIGNATURE & APPROVAL DATE:

NOTICE: PRINTS ARE THE EXCLUSIVE PROPERTY OF "MC SIGN COMPANY" ANY UN-AUTHORIZED USE OR DUPLICATION WILL RESULT IN A 20% CHARGE PER OCCURRENCE PER THE VALUE OF THE DISPLAY© MC SIGN CO. 1998

GAS PUMP & CANOPY

CL 2.7 - 1103 -1103 Thorntons CL 2'-7"

PMS 287 BLUE

.050 ALUMINUM TAB-
PAINTED WHITE W/
"FIRE RED" VINYL
COPY TO 2" HT.
TAB TO BE 2.5" x 4"
W/ 1.625" WIDE CONNECTOR

SIGN CONFIGURATION APPEARANCE

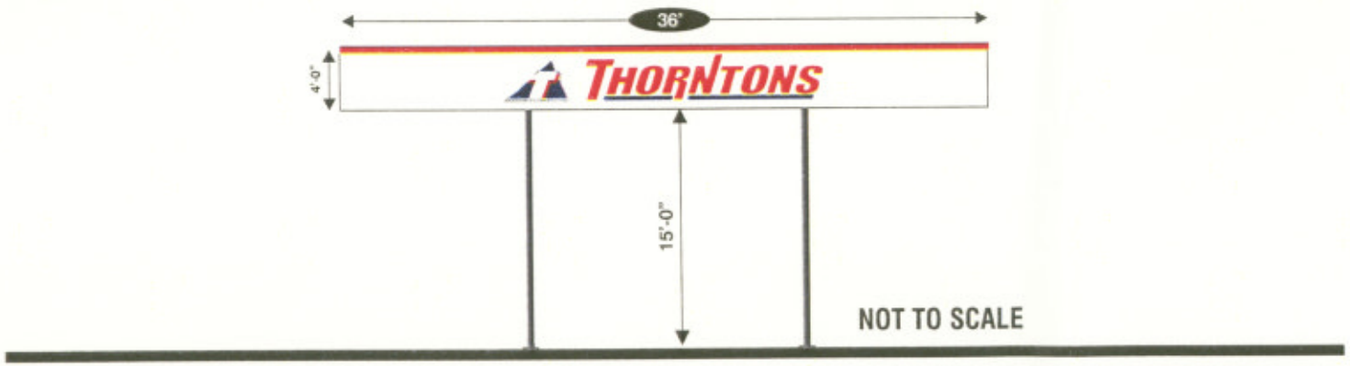

NOT TO SCALE

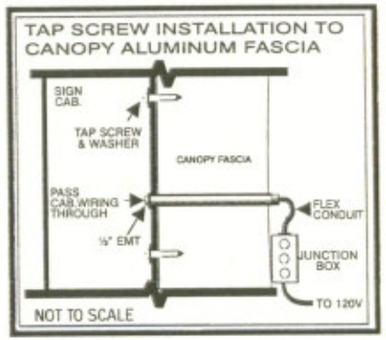

A	Disconnect switch
B	Mounting varies
C	Primary electrical source
D	Metal box to house power supply
E	Electronic power supply #4
F	5" (.040) Alum.return Grip Guard paint: white
G	1" Red jewelite trim cap
H	⅛" Clear acrylic painted Grip Flex flame red #585
I	Pb3 or black plastic bushings
J	Weep holes
K	Red LED lighting
L	1" Blue trim cap (to match PMS#287)
M	1/8" Blue acrylic to match PMS#287
N	Blue LED lighting

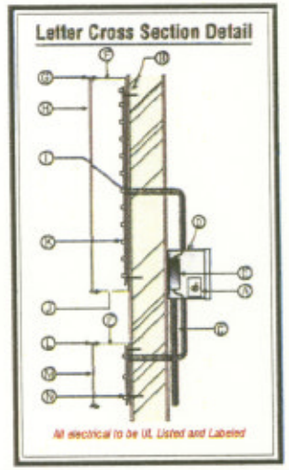

INTERNAL

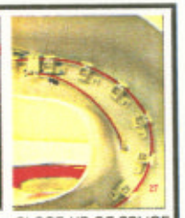

CLOSE-UP OF SPLICE

MC SIGN COMPANY
8959 TYLER BLVD.
MENTOR, OHIO 44060
PH. 440-209-6200 FAX 440-209-6277

CLIENT:	THORNTONS
ADDRESS:	SITE #604 317 MYATT DR. MADISON, TN 37115
TICKET NUMBER:	116560-4
DATE:	11-6-07
PROJECT MANAGER:	MATTHEW MINGEE
DESIGNER:	TS
ELECTRONIC FILE LOCATION:	THORNTONS/LOCATIONS/
ELECTRONIC FILE NAME:	#604 MADISON, TN
SQUARE FOOTAGE:	38.1'
SCALE:	1/2"= 1'-0"
REV:	#1 #2 #3 #4 #5 #6 #7 #8 #9
COMMENTS:	

Sign On.™
Partner with the best.

CLIENT SIGNATURE & APPROVAL DATE:

NOTICE: PRINTS ARE THE EXCLUSIVE PROPERTY OF "MC SIGN COMPANY" ANY UN-AUTHORIZED USE OR DUPLICATION WILL RESULT IN A 20% CHARGE PER OCCURRENCE PER THE VALUE OF THE DISPLAY© MC SIGN CO. 1998

GAS PUMP & CANOPY

TL2.7 - 1103 -1103 T Logo 2'-7" X 4'-1"

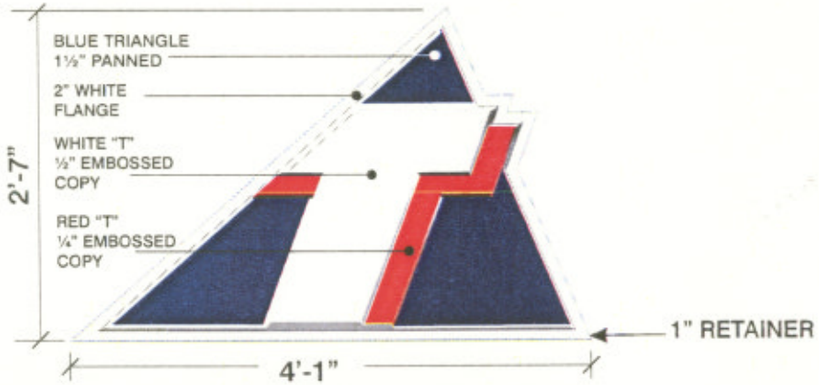

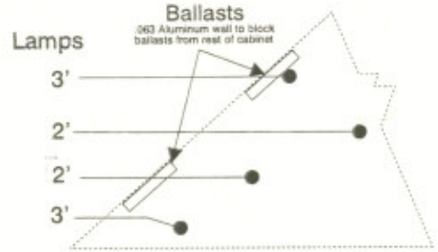

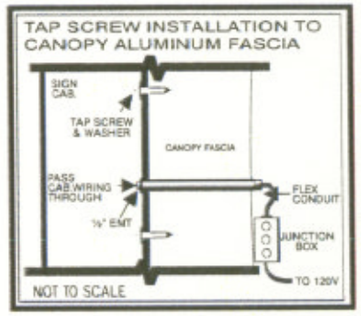

GRIP FLEX #585 FLAME RED

PMS 287 BLUE

SIGN CONFIGURATION APPEARANCE

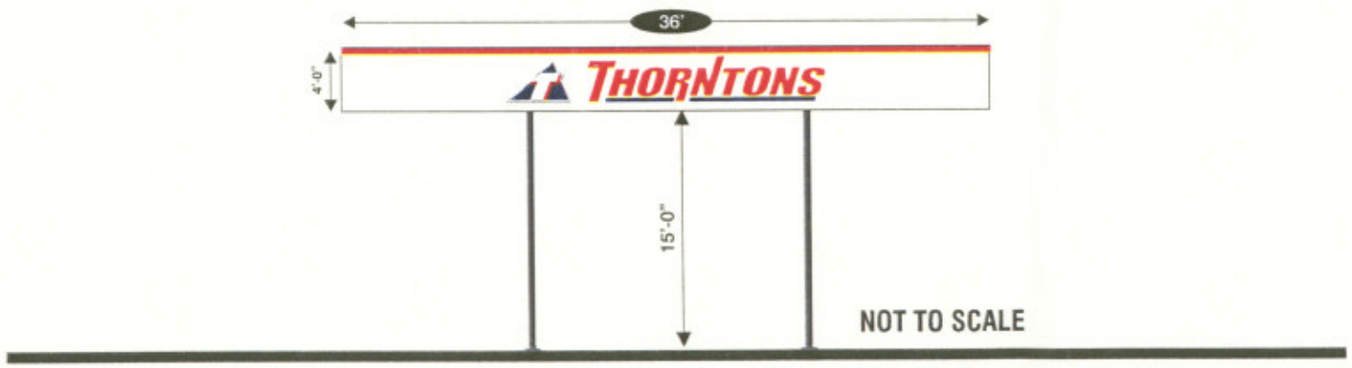

NOT TO SCALE

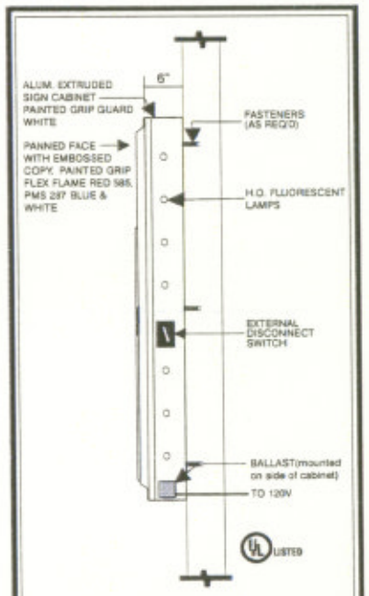

S/F SIGN
MOUNTING DETAIL

MC SIGN COMPANY
8959 TYLER BLVD.
MENTOR, OHIO 44060
PH. 440-209-6200 FAX 440-209-6277

CLIENT:	TICKET NUMBER:	DATE:	SQUARE FOOTAGE:	SCALE:	COMMENTS:
THORNTONS	116560-5	11-6-07	10.5'	3/4"= 1'-0"	
ADDRESS:	PROJECT MANAGER:	DESIGNER:	REV:		
SITE #604 317 MYATT DR. MADISON, TN 37115	MATTHEW MINGEE	TS	#1 #2 #3 #4 #5 #6 #7 #8 #9		
	ELECTRONIC FILE LOCATION: THORNTONS/LOCATIONS/				
	ELECTRONIC FILE NAME: #604 MADISON, TN				

Sign On.™
Partner with the best.

CLIENT SIGNATURE & APPROVAL DATE:

NOTICE: PRINTS ARE THE EXCLUSIVE PROPERTY OF "MC SIGN COMPANY" ANY UN-AUTHORIZED USE OR DUPLICATION WILL RESULT IN A 20% CHARGE PER OCCURRENCE PER THE VALUE OF THE DISPLAY© MC SIGN CO. 1998

GAS PUMP & CANOPY

PNB - 1107 PUMP NUMBERS / BRACKETS

PUMP STATION NUMBERS WITH BLUE TRIANGLE

TOP VIEW

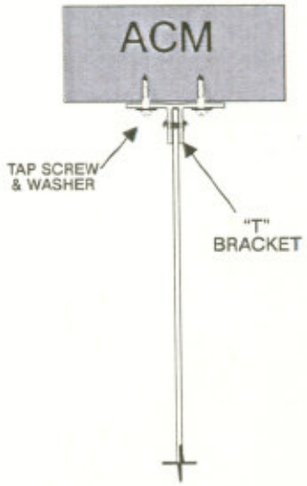

PUMP NUMBERS TO BE INSTALLED
TO THE STORE SIDE OF THE CANOPY

MC SIGN COMPANY
8959 TYLER BLVD.
MENTOR, OHIO 44060
PH. 440-209-6200 FAX 440-209-6277

CLIENT:	THORNTONS
ADDRESS:	SITE #604 317 MYATT DR. MADISON, TN 37115
TICKET NUMBER:	116560-6
DATE:	11-6-07
PROJECT MANAGER:	MATTHEW MINGEE
DESIGNER:	TS
ELECTRONIC FILE LOCATION:	THORNTONS/LOCATIONS/
ELECTRONIC FILE NAME:	#604 MADISON, TN
SQUARE FOOTAGE:	16.38' TOTAL
SCALE:	3/4"= 1'-0"
REV:	#1 #2 #3 #4 #5 #6 #7 #8 #9
COMMENTS:	

Sign On.™
Partner with the best.

CLIENT SIGNATURE & APPROVAL DATE:

NOTICE: PRINTS ARE THE EXCLUSIVE PROPERTY OF "MC SIGN COMPANY" ANY UN-AUTHORIZED USE OR DUPLICATION WILL RESULT IN A 20% CHARGE PER OCCURRENCE PER THE VALUE OF THE DISPLAY© MC SIGN CO. 1998

MONUMENT

D/F ILLUMINATED MONUMENT SIGN WITH PRICER UNIT AND ELECTRONIC DISPLAY UNIT

**NOTE: UNLEADED SIDE CLOSEST TO ROAD*

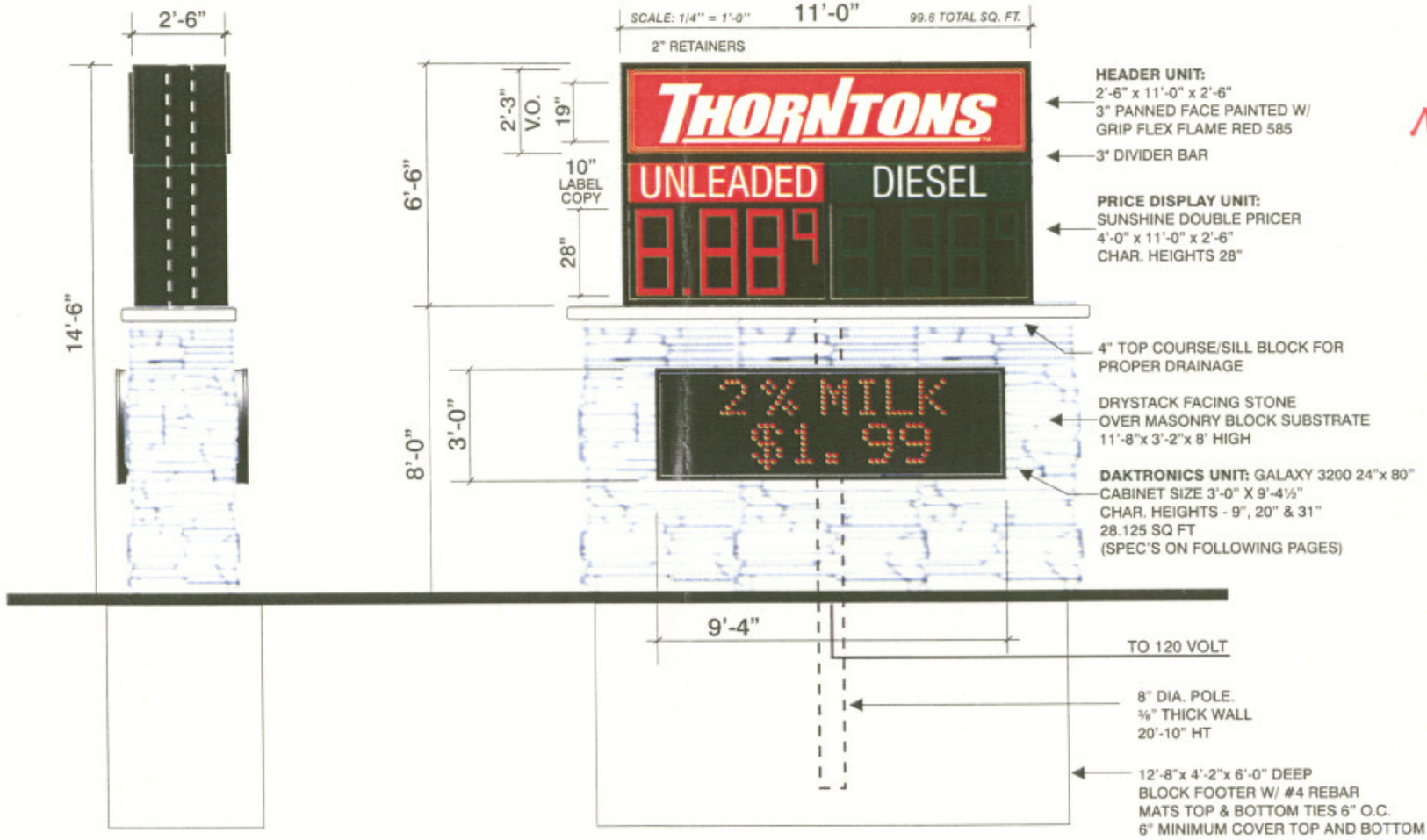

Max Height
6'
48 sq Ft

MC SIGN COMPANY
8959 TYLER BLVD.
MENTOR, OHIO 44060
PH. 440-209-6200 FAX 440-209-6277

CLIENT:	TICKET NUMBER:	DATE:	SQUARE FOOTAGE:	SCALE:	COMMENTS:
THORNTONS	116560-7	11-6-07	99.6'	1/4"= 1'-0"	

PROJECT MANAGER:	DESIGNER:
MATTHEW MINGEE	TS

ADDRESS: SITE #604, 317 MYATT DR., MADISON, TN 37115

ELECTRONIC FILE LOCATION: THORNTONS/LOCATIONS/

ELECTRONIC FILE NAME: #604 MADISON, TN

REV:					
#1		#2		#3	
#4		#5		#6	
#7		#8		#9	

Sign On.™
Partner with the best.

CLIENT SIGNATURE & APPROVAL DATE:

NOTICE: PRINTS ARE THE EXCLUSIVE PROPERTY OF "MC SIGN COMPANY" ANY UN-AUTHORIZED USE OR DUPLICATION WILL RESULT IN A 20% CHARGE PER OCCURRENCE PER THE VALUE OF THE DISPLAY© MC SIGN CO. 1998

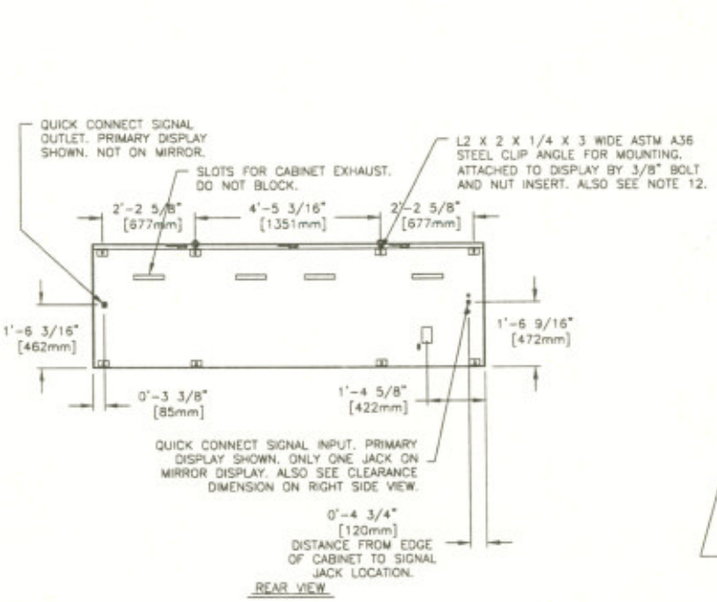

TOP VIEW

IN ORDER TO MAINTAIN THE STRUCTURAL INTEGRITY OF THE DISPLAY CABINET, THE 90° ANGLE BETWEEN THE CABINET AND THE LIFTING METHOD MUST BE MAINTAINED.

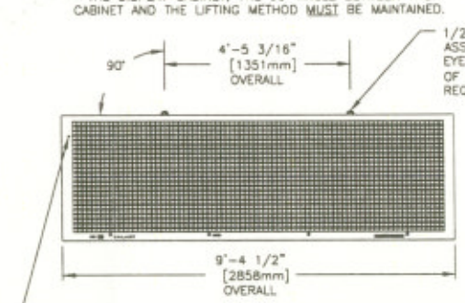

FRONT VIEW

BOTTOM VIEW

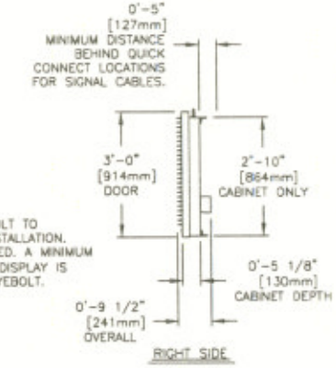

RIGHT SIDE

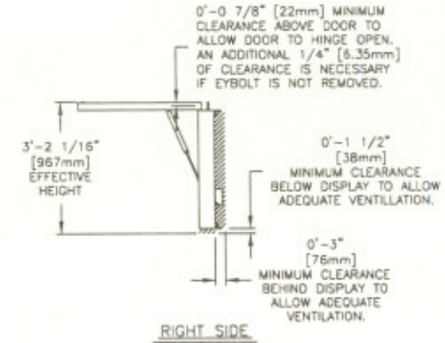

RIGHT SIDE
SHOWN WITH DOOR HINGED OPEN.

NOTES:

1) ALL DIMENSIONS ARE IN FEET AND INCHES [MILLIMETERS].
2) DISPLAY IS ALL ALUMINUM CONSTRUCTION.
3) DISPLAY CABINET COLOR IS FLAT BLACK.
4) FRONT ACCESS FOR SERVICE BY OPENING THE DOOR AS SHOWN BY USING A 5/32" ALLEN (HEX) WRENCH. WRENCH IS NOT PROVIDED.
5) ESTIMATED WEIGHT IS: 175 LBS [80 KG]
6) DAKTRONICS IS NOT RESPONSIBLE FOR THE MAIN ELECTRICAL DISCONNECT.
7) DAKTRONICS IS NOT RESPONSIBLE FOR THE MOUNTING HARDWARE OR THE INTEGRITY OF THE STRUCTURE THE DISPLAY IS MOUNTED TO.
8) FACE PANEL IS 1/8" [3.175mm] NOMINAL (0.118" [3mm] ACTUAL) THICK OUTDOOR GRADE CLEAR POLYCARBONATE.
9) DISPLAY L.E.D. COLOR IS MONOCHROME RED OR AMBER.
10) EYEBOLTS MAY NOT BE USED FOR PERMANENT INSTALLATION.
11) ALL CLIP ANGLES (OR THEIR LOCATIONS) MUST BE USED FOR DISPLAY INSTALLATION. FOR ADDITIONAL MOUNTING DETAILS SEE DAKTRONICS DRAWING A-202043.
12) VENTILATION INLET AND EXHAUST SLOTS MUST NOT BE BLOCKED OR DISPLAY WARRANTY WILL BE VOID.
13) IF DISPLAY IS TO BE ENCLOSED INTO A SURROUNDING STRUCTURE, FOR ADEQUATE VENTILATION A MINIMUM OPENING AREA OF 200 SQ. INCHES [129,032 SQ. MILLIMETERS] IS REQUIRED FOR BOTH INLET AND EXHAUST.
14) THE EFFECTIVE HEIGHT INCLUDES ALLOWANCES FOR DOOR TO OPEN AND FOR BOTTOM VENTILATION.
15) POWER REQUIREMENTS. RED DISPLAY: 3.99 AMPS, 478 WATTS @120VAC. AMBER DISPLAY: 5.62 AMPS, 674 WATTS @120VAC.

REV.	DATE	DESCRIPTION	BY	APPR.
02	18MAY05	UPDATED PER DESIGN CHANGES.	SWM	DJD
01	30AUG04	CHANGED HEIGHT FROM 2'-11 11/16".	DJD	

THE CONCEPTS EXPRESSED AND DETAILS SHOWN ON THIS DRAWING ARE CONFIDENTIAL AND PROPRIETARY. DO NOT REPRODUCE BY ANY MEANS, INCLUDING ELECTRONICALLY WITHOUT THE EXPRESSED WRITTEN CONSENT OF DAKTRONICS, INC. COPYRIGHT 2004 DAKTRONICS, INC.

DAKTRONICS, INC. BROOKINGS, SD 57006

PROJ: OUTDOOR GALAXY DISPLAYS
TITLE: SHOP DRAWING, AF-3200-24X80-34-*-*, 120
DES. BY: DDAGGITT DRAWN BY: DDAGGITT DATE: 26 APR 04
REVISION 02 APPR. BY: SCALE: 1 = 30
1301-E10B-209973

MC SIGN COMPANY
8959 TYLER BLVD.
MENTOR, OHIO 44060
PH. 440-209-6200 FAX 440-209-6277

CLIENT: THORNTONS

ADDRESS: SITE #604
317 MYATT DR.
MADISON, TN 37115

TICKET NUMBER:	DATE:
116560-8	11-6-07

PROJECT MANAGER:	DESIGNER:
MATTHEW MINGEE	TS

ELECTRONIC FILE LOCATION: THORNTONS/LOCATIONS/
ELECTRONIC FILE NAME: #604 MADISON, TN

SQUARE FOOTAGE:	SCALE:
NA	NTS

REV:

#1		#2		#3	
#4		#5		#6	
#7		#8		#9	

COMMENTS:

Sign On.™
Partner with the best.

CLIENT SIGNATURE & APPROVAL DATE:

NOTICE: PRINTS ARE THE EXCLUSIVE PROPERTY OF "MC SIGN COMPANY" ANY UN-AUTHORIZED USE OR DUPLICATION WILL RESULT IN A 20% CHARGE PER OCCURRENCE PER THE VALUE OF THE DISPLAY©MC SIGN CO. 1998

REV.	DATE	DESCRIPTION	BY	APPR.
02	08MAR06	REMOVED RS-422 OUT FROM THE PRIMARY FACE	JNR	
01	26DEC03	REMOVED NOTE 8. THIS NOTE GAVE DETAIL ABOUT THE TEMP SENSOR CABLE.	DJM	

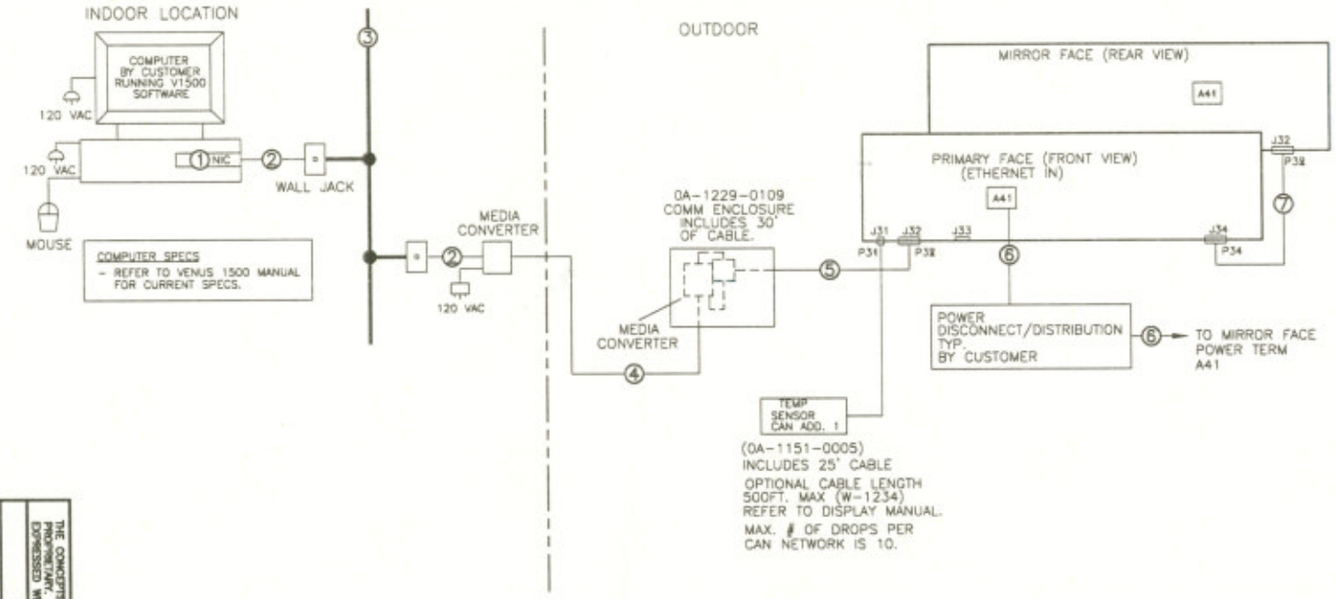

NOTES:

1. NETWORK CARD (BY CUSTOMER)
2. ETHERNET CABLE (BY CUSTOMER)
3. EHTERNET NETWORK (BY CUSTOMER)
4. 4 FIBER CABLE, 62.5/125 GRADE DAK. P.N. (W-1376). GRAYBAR P.N. (M-RN-4-BO-L-BK-OTC) IN CONDUIT WHERE REQUIRED.
5. 4 PAIR, 24 AWG, STRANDED, SHIELDED 30 FT. CABLE. DAK. P.N. (W-1811). FIELD SIGNAL TERMINATIONS TO BE 10 POS QUICK CONNECT.
6. POWER FEEDER SIZED AS NEEDED, BY CUSTOMER. ALL WIRING TO MEET NEC AND LOCAL ELECTRICAL CODES.
7. 31 PIN, 22 AWG, STRANDED, SHIELDED, 6 FT. CABLE, DAK. P.N. (W-1503). FIELD SIGNAL TERMINATIONS TO BE 31 POS QUICK CONNECT. INCLUDED WITH MIRROR FACE.
8. ALL DISPLAYS MUST BE GROUNDED PER ACTRICLE 250 AND 600 OF THE NATIONAL ELECTRICAL CODE WITH NO MORE THAN 10 OHMS GROUND RESISTANCE.

DETAIL: A

NETWORK	MEDIA CONVERTR	FIELD CABLE	MEDIA CONVERTR	COMM BOX
	PIN		PIN	
	TX		RX	
	RX		TX	

PROJ: M2 MATRIX CONTROLLER
TITLE: SYSTEM RISER DIAGRAM; FIBER ETHERNET COMM BOX
DES. BY: PGILK DRAWN BY: DMATHER DATE: 05 NOV 03
REVISION 02 APPR. BY: PG SCALE: NONE
1229-R01A-199455

DAKTRONICS, INC. BROOKINGS, SD 57006

THE CONCEPTS EXPRESSED AND DETAILS SHOWN ON THIS DRAWING ARE CONFIDENTIAL AND PROPRIETARY. DO NOT REPRODUCE IN ANY MEDIUM, INCLUDING ELECTRONICALLY WITHOUT THE EXPRESSED WRITTEN CONSENT OF DAKTRONICS, INC. COPYRIGHT 2003 DAKTRONICS, INC.

MC SIGN COMPANY
8959 TYLER BLVD.
MENTOR, OHIO 44060
PH. 440-209-6200 FAX 440-209-6277

CLIENT: THORNTONS

ADDRESS: SITE #604
317 MYATT DR.
MADISON, TN 37115

TICKET NUMBER:	DATE:
116560-9	11-6-07
PROJECT MANAGER: MATTHEW MINGEE	DESIGNER: TS

ELECTRONIC FILE LOCATION: THORNTONS/LOCATIONS/
ELECTRONIC FILE NAME: #604 MADISON, TN

SQUARE FOOTAGE:	SCALE:
NA	NTS

REV:					
#1		#2		#3	
#4		#5		#6	
#7		#8		#9	

COMMENTS:

Sign On.™
Partner with the best.

CLIENT SIGNATURE & APPROVAL DATE:

NOTICE: PRINTS ARE THE EXCLUSIVE PROPERTY OF "MC SIGN COMPANY" ANY UN-AUTHORIZED USE OR DUPLICATION WILL RESULT IN A 20% CHARGE PER OCCURRENCE PER THE VALUE OF THE DISPLAY©MC SIGN CO. 1998

GAS PUMP & CANOPY

METAL TACKER PUMP SIGNAGE

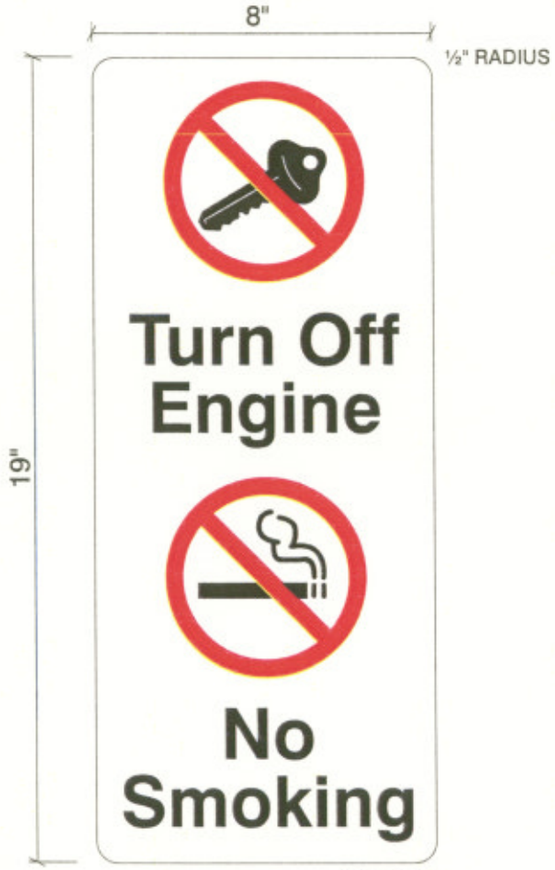

1.1 SQ FT

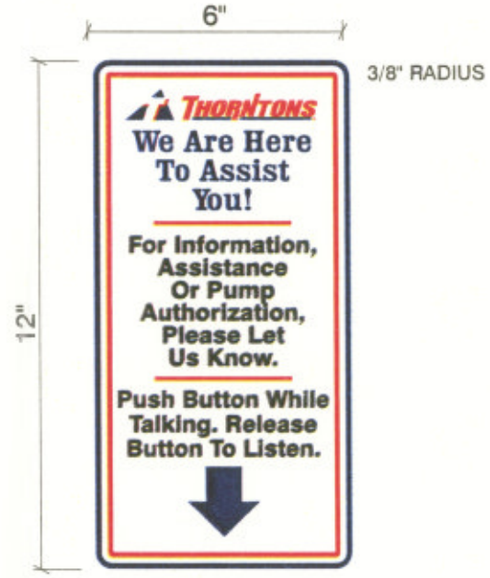

0.5 SQ FT

ALL SIGNS MOUNT WITH "VHB" TAPE
REQUIRED AT ALL LOCATIONS
QUANTITY T.B.D.

MC SIGN COMPANY
8959 TYLER BLVD.
MENTOR, OHIO 44060
PH. 440-209-6200 FAX 440-209-6277

CLIENT:	TICKET NUMBER:	DATE:	SQUARE FOOTAGE:	SCALE:
THORNTONS	116560-10	11-6-07	SHOWN	3"= 1'-0"

PROJECT MANAGER:	DESIGNER:
MATTHEW MINGEE	TS

ADDRESS: SITE #604, 317 MYATT DR., MADISON, TN 37115

ELECTRONIC FILE LOCATION: THORNTONS/LOCATIONS/

ELECTRONIC FILE NAME: #604 MADISON, TN

REV:					
#1		#2		#3	
#4		#5		#6	
#7		#8		#9	

COMMENTS:

Sign On.™
Partner with the best.

CLIENT SIGNATURE & APPROVAL DATE:

NOTICE: PRINTS ARE THE EXCLUSIVE PROPERTY OF "MC SIGN COMPANY" ANY UN-AUTHORIZED USE OR DUPLICATION WILL RESULT IN A 20% CHARGE PER OCCURRENCE PER THE VALUE OF THE DISPLAY© MC SIGN CO. 1998

Elevations Approved 8/14/08

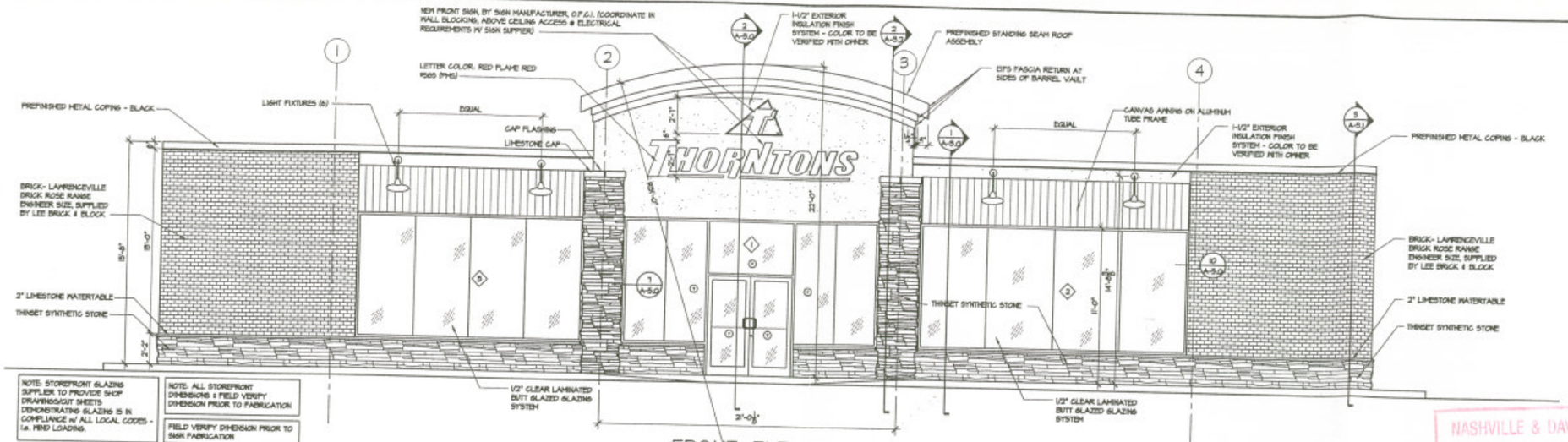

FRONT ELEVATION (1 / A-2.0)
SCALE: 1/4" = 1'-0"

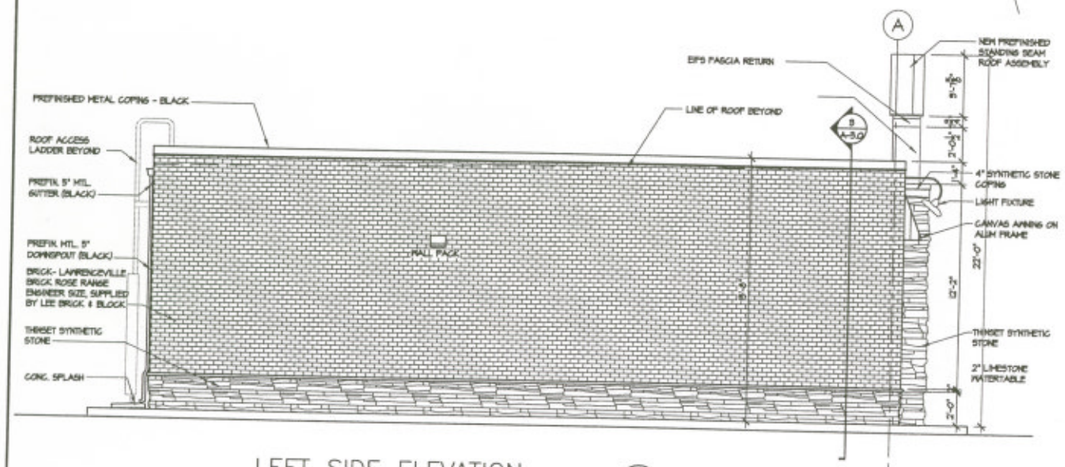

LEFT SIDE ELEVATION (2 / A-2.0)
SCALE: 1/4" = 1'-0"

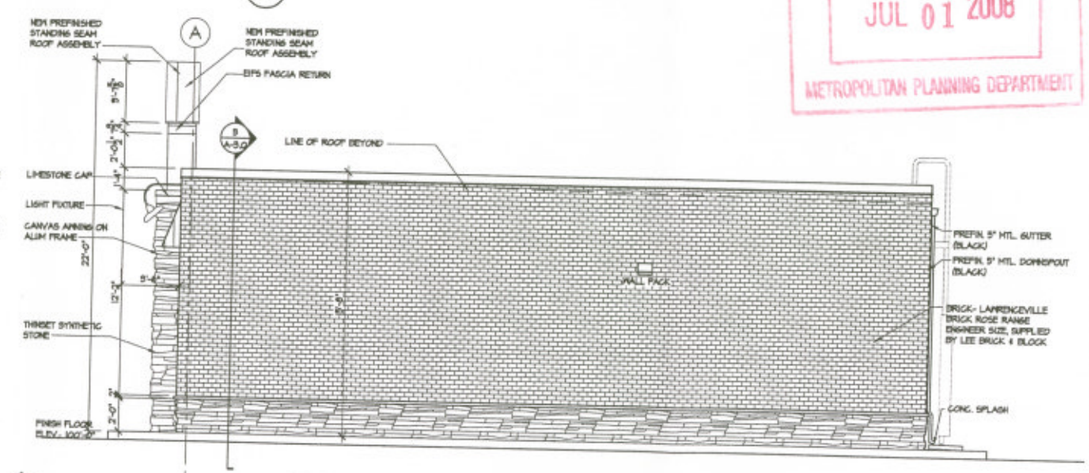

RIGHT SIDE ELEVATION (3 / A-2.0)
SCALE: 1/4" = 1'-0"

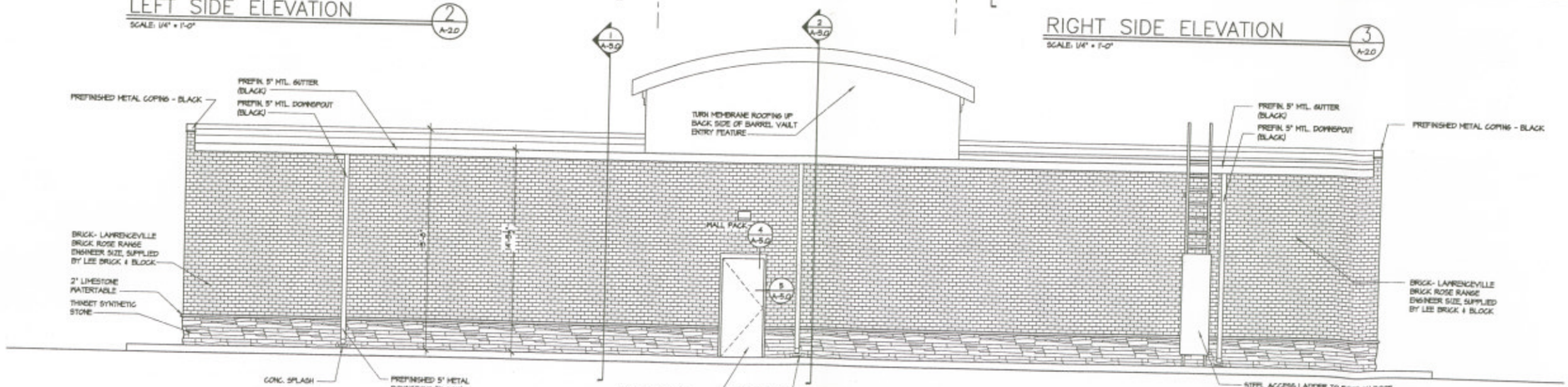

REAR ELEVATION (4 / A-2.0)
SCALE: 1/4" = 1'-0"

NASHVILLE & DAVIDSON COUNTY
JUL 01 2008
METROPOLITAN PLANNING DEPARTMENT

07-1905-02
PROJECT NUMBER

STORE # 604

ANTHONY J. BAYUS
REGISTERED ARCHITECT
STATE OF TENNESSEE

BAYUS Design WORKS
HOME OF ARCHITECTURE
2906 Eastpoint Parkway • Louisville, Kentucky • 40223
o: 502.426.8000 • f: 502.426.8007 • bwa@bayusdesign.com

NEW BUILDING FOR:
THORNTONS
317 WYATT DRIVE & 800 ANDERSON LANE
MADISON, TN

DATE: 8-8-07
DATE REVISED
- 5-14-08

SHEET TITLE
ELEVATIONS

SHEET NUMBER
A-2.0

NOTES

1.) Any excavation, fill or other disturbance of the existing ground elevation must be done in accordance with Stormwater Management Ordinance No. 78-840 and approved by the Department of Water Services of Metropolitan Nashville-Davidson County.

2.) This drawing is for illustration purposes to indicate the basic premise of the development. The final lot count and details of the plan shall be governed by the appropriate regulations at the time of final application.

3.) Metro Water Services shall be provided sufficient and unencumbered ingress and egress at all times in order to maintain, repair, replace and inspect any utilities within the property.

4.) Size driveway culverts per the design criteria set forth by the Metro Stormwater Management Manual (Minimum driveway culvert in Metro R.O.W. is 15" C.M.P.).

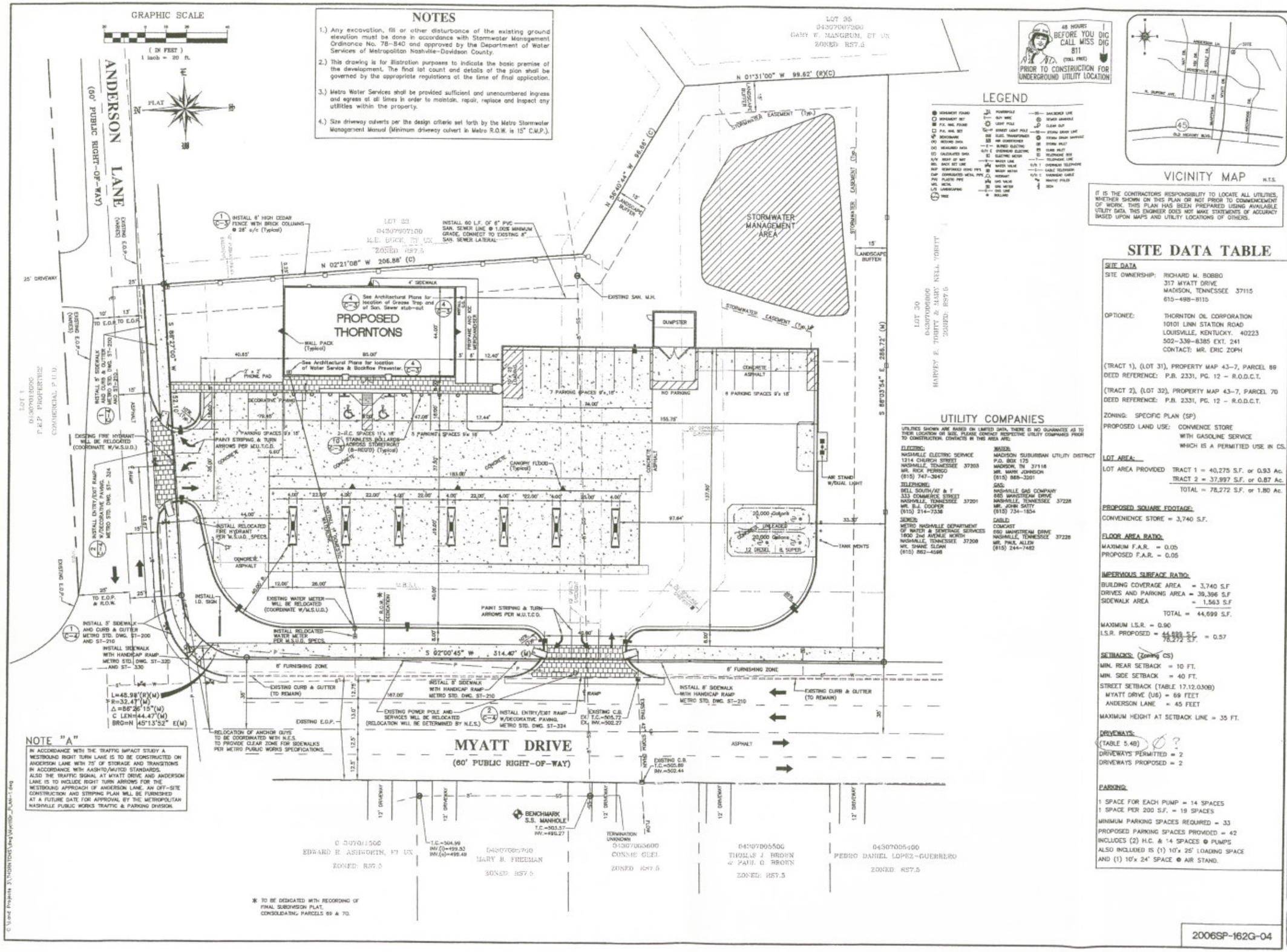

NOTE "A"

IN ACCORDANCE WITH THE TRAFFIC IMPACT STUDY A WESTBOUND RIGHT TURN LANE IS TO BE CONSTRUCTED ON ANDERSON LANE WITH 75' OF STORAGE AND TRANSITIONS IN ACCORDANCE WITH AASHTO/MUTCD STANDARDS. ALSO THE TRAFFIC SIGNAL AT MYATT DRIVE AND ANDERSON LANE IS TO INCLUDE RIGHT TURN ARROWS FOR THE WESTBOUND APPROACH OF ANDERSON LANE. AN OFF-SITE CONSTRUCTION AND STRIPING PLAN WILL BE FURNISHED AT A FUTURE DATE FOR APPROVAL BY THE METROPOLITAN NASHVILLE PUBLIC WORKS TRAFFIC & PARKING DIVISION.

48 HOURS BEFORE YOU DIG CALL MISS DIG 811 (TOLL FREE) PRIOR TO CONSTRUCTION FOR UNDERGROUND UTILITY LOCATION

LEGEND

MONUMENT FOUND
MONUMENT SET
P.K. NAIL FOUND
P.K. NAIL SET
BENCHMARK
(R) RECORD DATA
(M) MEASURED DATA
(C) CALCULATED DATA
R/W RIGHT OF WAY
BSL BACK SET LINE
RCP REINFORCED CONC PIPE
CMP CORRUGATED METAL PIPE
PVC PLASTIC PIPE
MTL METAL
L/S LANDSCAPING
TREE
POWERPOLE
GUY WIRE
LIGHT POLE
STREET LIGHT POLE
ELEC. TRANSFORMER
AIR CONDITIONER
BURIED ELECTRIC
OVERHEAD ELECTRIC
ELECTRIC METER
WATER LINE
WATER VALVE
WATER METER
HYDRANT
GAS VALVE
GAS METER
GAS LINE
BOLLARD
SANITARY SEWER LINE
SEWER MANHOLE
CLEAN OUT
STORM DRAIN LINE
STORM DRAIN MANHOLE
STORM INLET
CURB INLET
TELEPHONE BOX
TELEPHONE LINE
OVERHEAD TELEPHONE
CABLE TELEVISION
OVERHEAD CABLE
TRAFFIC POLES
SIGN

UTILITY COMPANIES

UTILITIES SHOWN ARE BASED ON LIMITED DATA. THERE IS NO GUARANTEE AS TO THEIR LOCATION OR SIZE. PLEASE CONTACT RESPECTIVE UTILITY COMPANIES PRIOR TO CONSTRUCTION. CONTACTS IN THIS AREA ARE:

ELECTRIC:
NASHVILLE ELECTRIC SERVICE
1214 CHURCH STREET
NASHVILLE, TENNESSEE 37203
MR. RICK PERRIGO
(615) 747-3947

TELEPHONE:
BELL SOUTH/AT & T
333 COMMERCE STREET
NASHVILLE, TENNESSEE 37201
MR. B.J. COOPER
(615) 214-7336

SEWER:
METRO NASHVILLE DEPARTMENT OF WATER & SEWERAGE SERVICES
1600 2nd AVENUE NORTH
NASHVILLE, TENNESSEE 37208
MR. SHANE SLOAN
(615) 862-4596

WATER:
MADISON SUBURBAN UTILITY DISTRICT
P.O. BOX 175
MADISON, TN 37116
MR. MARK JOHNSON
(615) 868-3201

GAS:
NASHVILLE GAS COMPANY
645 MAINSTREAM DRIVE
NASHVILLE, TENNESSEE 37228
MR. JOHN SATTY
(615) 734-1854

CABLE:
COMCAST
650 MAINSTREAM DRIVE
NASHVILLE, TENNESSEE 37228
MR. PAUL ALLEN
(615) 244-7482

VICINITY MAP

H.T.S.

IT IS THE CONTRACTORS RESPONSIBILITY TO LOCATE ALL UTILITIES, WHETHER SHOWN ON THIS PLAN OR NOT PRIOR TO COMMENCEMENT OF WORK. THIS PLAN HAS BEEN PREPARED USING AVAILABLE UTILITY DATA. THIS ENGINEER DOES NOT MAKE STATEMENTS OF ACCURACY BASED UPON MAPS AND UTILITY LOCATIONS OF OTHERS.

SITE DATA TABLE

SITE DATA

SITE OWNERSHIP: RICHARD M. BOBBO
317 MYATT DRIVE
MADISON, TENNESSEE 37115
615-498-8115

OPTIONEE: THORNTON OIL CORPORATION
10101 LINN STATION ROAD
LOUISVILLE, KENTUCKY. 40223
502-339-8385 EXT. 241
CONTACT: MR. ERIC ZOPH

(TRACT 1), (LOT 31), PROPERTY MAP 43-7, PARCEL 69
DEED REFERENCE: P.B. 2331, PG. 12 - R.O.D.C.T.

(TRACT 2), (LOT 32), PROPERTY MAP 43-7, PARCEL 70
DEED REFERENCE: P.B. 2331, PG. 12 - R.O.D.C.T.

ZONING: SPECIFIC PLAN (SP)

PROPOSED LAND USE: CONVIENCE STORE WITH GASOLINE SERVICE WHICH IS A PERMITTED USE IN CS.

LOT AREA:

LOT AREA PROVIDED TRACT 1 = 40,275 S.F. or 0.93 Ac.
TRACT 2 = 37,997 S.F. or 0.87 Ac.
TOTAL = 78,272 S.F. or 1.80 Ac.

PROPOSED SQUARE FOOTAGE:

CONVENIENCE STORE = 3,740 S.F.

FLOOR AREA RATIO:

MAXIMUM F.A.R. = 0.05
PROPOSED F.A.R. = 0.05

IMPERVIOUS SURFACE RATIO:

BUILDING COVERAGE AREA = 3,740 S.F
DRIVES AND PARKING AREA = 39,396 S.F
SIDEWALK AREA = 1,563 S.F
TOTAL = 44,699 S.F.

MAXIMUM I.S.R. = 0.90
I.S.R. PROPOSED = 44,699 S.F. / 78,272 S.F. = 0.57

SETBACKS: (Zoning CS)

MIN. REAR SETBACK = 10 FT.
MIN. SIDE SETBACK = 40 FT.
STREET SETBACK (TABLE 17.12.030B)
MYATT DRIVE (U6) = 69 FEET
ANDERSON LANE = 45 FEET
MAXIMUM HEIGHT AT SETBACK LINE = 35 FT.

DRIVEWAYS:

(TABLE 5.4B) Ø ?
DRIVEWAYS PERMITTED = 2
DRIVEWAYS PROPOSED = 2

PARKING:

1 SPACE FOR EACH PUMP = 14 SPACES
1 SPACE PER 200 S.F. = 19 SPACES
MINIMUM PARKING SPACES REQUIRED = 33
PROPOSED PARKING SPACES PROVIDED = 42
INCLUDES (2) H.C. & 14 SPACES @ PUMPS
ALSO INCLUDED IS (1) 10'x 25' LOADING SPACE AND (1) 10'x 24' SPACE @ AIR STAND.

REVISIONS

DATE	DESCRIPTION	BY
11-8-07	ADDED 20' DRAINAGE ESMT. REVISED STORMWATER ESMT.	TD
11-15-07	PER METRO PLANNING COMMENTS, NOV. 12, 2007.	TD

JOSEPH G. PETROSKY — STATE OF TENNESSEE

THIS DRAWING AND THE DESIGN SHOWN IS THE PROPERTY OF JOSEPH G. PETROSKY ASSOC. L.L.C. THE REPRODUCTION, COPYING OR THE USE OF THIS DRAWING WITHOUT WRITTEN CONSENT FROM THE ENGINEER IS PROHIBITED. ANY INFRINGEMENT WILL BE SUBJECT TO LEGAL ACTION BY JOSEPH G. PETROSKY ASSOC. L.L.C.

THORNTONS
MYATT DRIVE & ANDERSON LANE
MADISON, TENNESSEE

SITE & UTILITY PLAN

JOSEPH G. PETROSKY ASSOCIATES, L.L.C.
CIVIL ENGINEERING - LAND PLANNING
DESIGN: J.G. PETROSKY | DRAFTING: E. DAVIS
SCALE: 1"= 20' | DATE: 08/30/07

JGPA No. 776.00

C-1

2006SP-162G-04

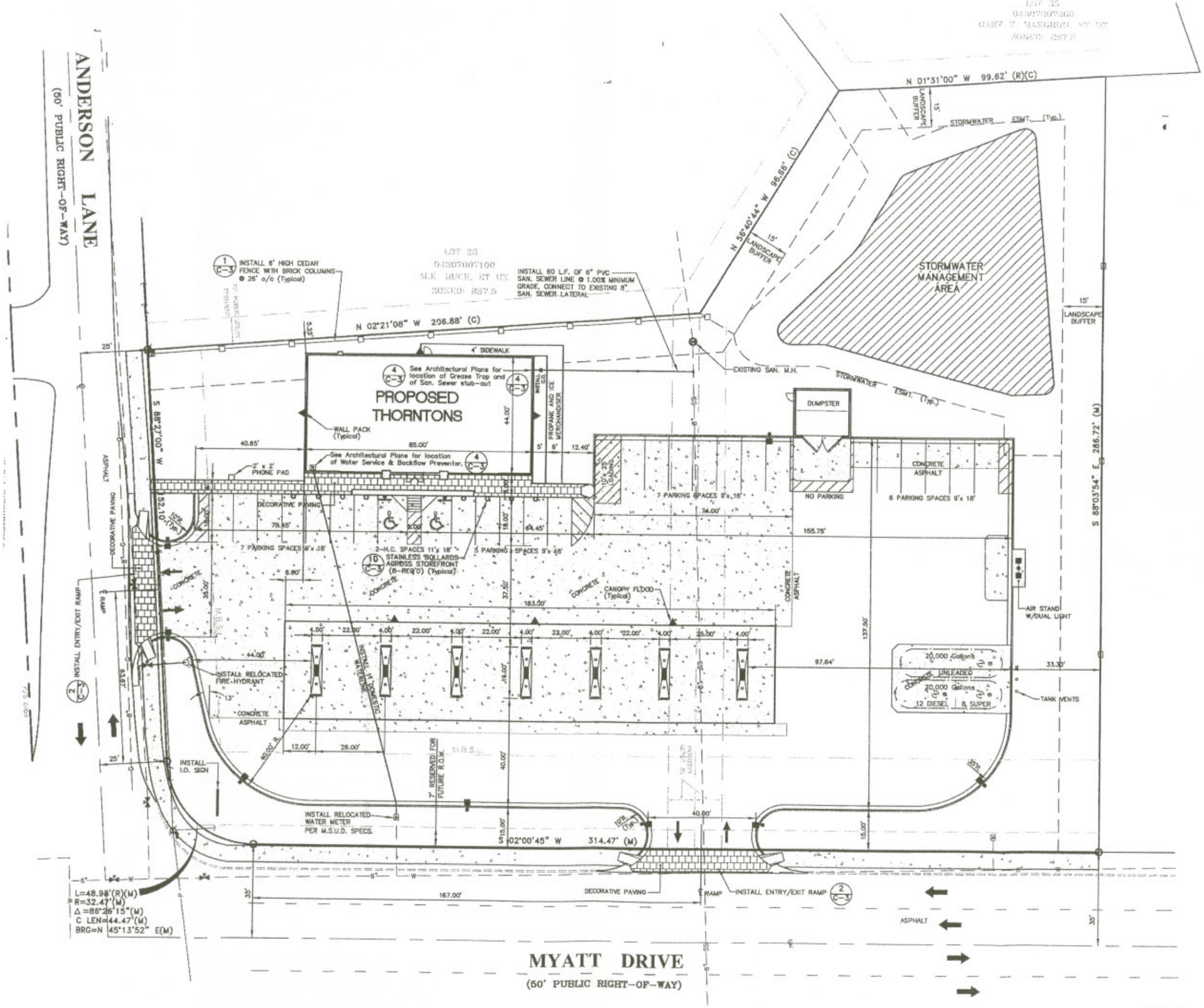
ANDERSON LANE
(50' PUBLIC RIGHT-OF-WAY)
LOT 35
04307007300
GARY N. MANGRUM, ET UX
ZONED: RST-5
N 01°31'00" W 99.62' (R)(C)
LANDSCAPE BUFFER
15'
STORMWATER ESMT. (Typ.)
N 56°40'44" W 96.58' (C)
STORMWATER MANAGEMENT AREA
LOT 33
04307007100
M.E. BUCK, ET UX
ZONED: RST-5
INSTALL 8' HIGH CEDAR FENCE WITH BRICK COLUMNS @ 26' o/c (Typical)
INSTALL 60 L.F. OF 6" PVC SAN. SEWER LINE @ 1.00% MINIMUM GRADE, CONNECT TO EXISTING 8" SAN. SEWER LATERAL
N 02°21'08" W 206.88' (C)
4' SIDEWALK
See Architectural Plans for location of Grease Trap and of San. Sewer stub-out
PROPOSED THORNTONS
WALL PACK (Typical)
See Architectural Plans for location of Water Service & Backflow Preventer.
2' x 2' PHONE PAD
DECORATIVE PAVING
7 PARKING SPACES 9'x 18'
2-H.C. SPACES 11'x 18'
STAINLESS BOLLARDS AGAINST STOREFRONT (8-REQ'D) (Typical)
5 PARKING SPACES 9'x 18'
CANOPY FLOOD (Typical)
INSTALL RELOCATED FIRE HYDRANT
CONCRETE ASPHALT
INSTALL I.D. SIGN
INSTALL RELOCATED WATER METER PER M.S.U.D. SPECS.
7' RESERVED FOR FUTURE R.O.W.
INSTALL DOMESTIC WATER METER
EXISTING SAN. M.H.
DUMPSTER
NO PARKING
6 PARKING SPACES 9'x 18'
AIR STAND W/DUAL LIGHT
20,000 Gallons UNLEADED
20,000 Gallons 12 DIESEL 8 SUPER
TANK MENTS
S 88°27'00" W
S 88°03'54" E 286.72' (M)
S 02°00'45" W 314.47' (M)
L=48.98'(R)(M)
R=32.47'(M)
Δ=86°26'15"(M)
C LEN=44.47'(M)
BRG=N 45°13'52" E(M)
DECORATIVE PAVING
INSTALL ENTRY/EXIT RAMP
ASPHALT
MYATT DRIVE
(50' PUBLIC RIGHT-OF-WAY)