(SP) RE-ZONING DEVELOPMENT PLANS
FOR
KELLY DRIVER SR. RETIREMENT SPECIFIC PLAN
A PROPOSED RETIREMENT COMMUNITY

MARK DRIVER - OWNER

3968 HIGHWAY 49 E - CHARLOTTE, TN 37036 - 615-364-8129

CIVIL DESIGN CONSULTANTS, LLC
CIVIL ENGINEERS ◦ LAND PLANNERS
CIVIL-DESIGN-CONSULTANTS, LLC
8170 COLEY DAVIS RD., NASHVILLE, TN. 37221
PHONE- (615) 319-2734 EMAIL- CIVILCONSULTANTS@BELLSOUTH.NET

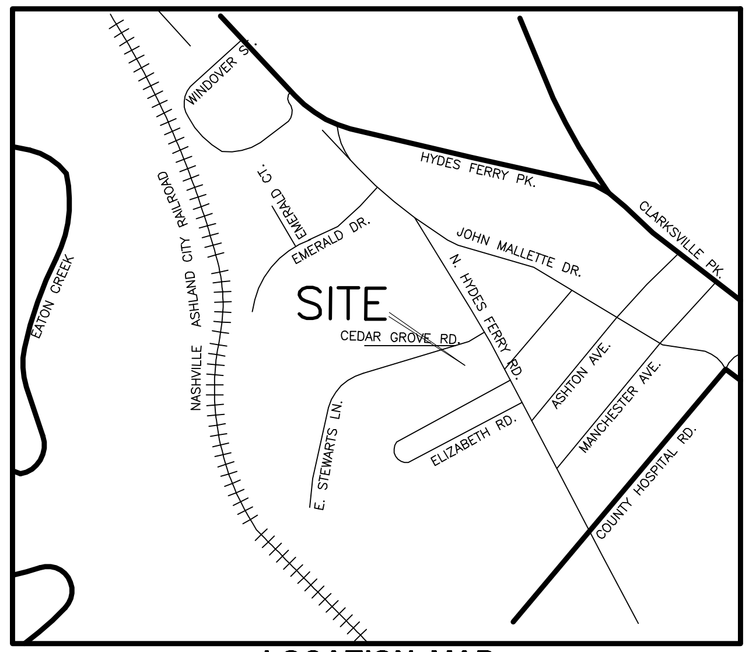

LOCATION MAP
NOT TO SCALE

INDEX OF SHEETS

SHEET	DESCRIPTION
01	COVER SHEET
02	EXISTING CONDITIONS & DEMOLITION PLAN
03	STAKEOUT PLAN
04	GRADING, DRAINAGE, & EROSION CONTROL PLAN
05	STORMWATER - BMP PLAN
06	UTILITY PLAN

DATA

- 2nd. COUNCILMANIC DISTRICT – FRANK HARRISON COUNCILMAN
- OWNER– MARK DRIVER– 3968 HWY 49E, CHARLOTTE, TN – 615–384–8129
- SUBDIVISION NAME – KELLY DRIVER SR. RETIREMENT SUBDIVISION
- SUBDIVISION NUMBER – TBD
- SEE BAR SCALE AND NORTH ARROW ON SHEET FOR APPROPRIATE INFORMATION
- SEE TITLE BLOCK FOR ENGINEER AND SURVEYOR INFORMATION
- FEMA FIRM MAP 47037C0204F DATED 4/20/01 – NOT IN A SPECIAL FLOOD HAZARD AREA

PURPOSE NOTE:

The purpose of this development plan is to allow for construction of 21 multi–family homes and a community clubhouse.

CONSISTENCY STATEMENT:

The proposed development as shown is consistent with the overall development of areas long range policy to permit Residential Low to Medium density developments. Proposed density and use is in concert with the allowable density and uses of neighboring properties.

PLANNING NOTE:

For any development standards, regulations and requirements not specifically shown on the SP plan and/or included as a condition of Commission or Council approval, the property shall be subject to the standards, regulations and requirements of the RM4 zoning district as of the date of the applicable request or application.

3605 HYDES FERRY PIKE
SECOND COUNCILMANIC DISTRICT
METRO NASHVILLE, DAVIDSON COUNTY, TENNESSEE

TAX MAP 069-16
PARCEL 54
ZONED RS10
REQ. ZONING: SP

METRO PROJECT NUMBER: 2009SP-017-001

CIVIL DESIGN CONSULTANTS, LLC
CIVIL ENGINEERS ◦ LAND PLANNERS
CIVIL-DESIGN-CONSULTANTS, LLC
8170 COLEY DAVIS RD., NASHVILLE, TN. 37221
PHONE- (615) 319-2734 EMAIL- CIVILCONSULTANTS@BELLSOUTH.NET

JARED R. GRAY — REGISTERED ENGINEER — No. 108403 — STATE OF TENNESSEE

KELLY DRIVER SR. RETIREMENT
DEVELOPMENT PLAN – 3605 HYDES FERRY PIKE
2nd COUNCIL DISTRICT
METRO NASHVILLE, DAVIDSON COUNTY TENNESSEE
COVER SHEET

3 11–14–09 (JRG) Rev. Per City Comments.
2 10–30–09 (JRG) Rev. Per City Comments.
1 08–18–09 (JRG) Rev. Per City Comments.
REVISIONS

DESIGNED BY:	J. GRAY
DRAWN BY:	J. GRAY
APPROVED BY:	J. GRAY
SCALE:	As Shown
DATE:	July 10, 2009
JOB NO.	WK. ORDER
09-005	001

SHEET NO.
01 of 06

PURPOSE NOTE:

THE PURPOSE OF THIS PLAN IS TO ALLOW FOR CONSTRUCTION OF 21 MULTI–FAMILY UNITS AND A COMMUNITY CLUBHOUSE.

GEOTECHNICAL NOTE:

NO GEOTECHNICAL STUDY HAS BEEN CONDUCTED ON THIS SITE. HOWEVER, THE DESIGN FOR SITE IMPROVEMENTS SHOWN ON THIS PLAN HAS RELIED ON EXPERIENCE WITH SIMILAR PROJECTS AND SIMILAR SOIL/SITE CONDITIONS. IF, IN THE PURSUIT OF THIS WORK BY THE CONTRACTOR, CONDITIONS OR CIRCUMSTANCES ARE ENCOUNTERED THAT ARE DIFFERENT THAN REFLECTED IN THESE PLANS OR THAT APPEAR TO IMPACT THE SCOPE OF THE WORK, THE CONTRACTOR WILL IMMEDIATELY NOTIFY THE CIVIL ENGINEER AND THE OWNER/DEVELOPER BEFORE ANY REMEDIAL COURSE OF ACTION OR DESIGN CHANGE IS INITIATED. ALL PARTIES (OWNER, CIVIL ENGINEER, PROPER GOVERNMENTAL AGENCIES, AND CONTRACTOR) MUST BE IN AGREEMENT AND THE MAGNITUDE OF THE COST/TIME REQUIRED FOR THE MEASURES ESTABLISHED.

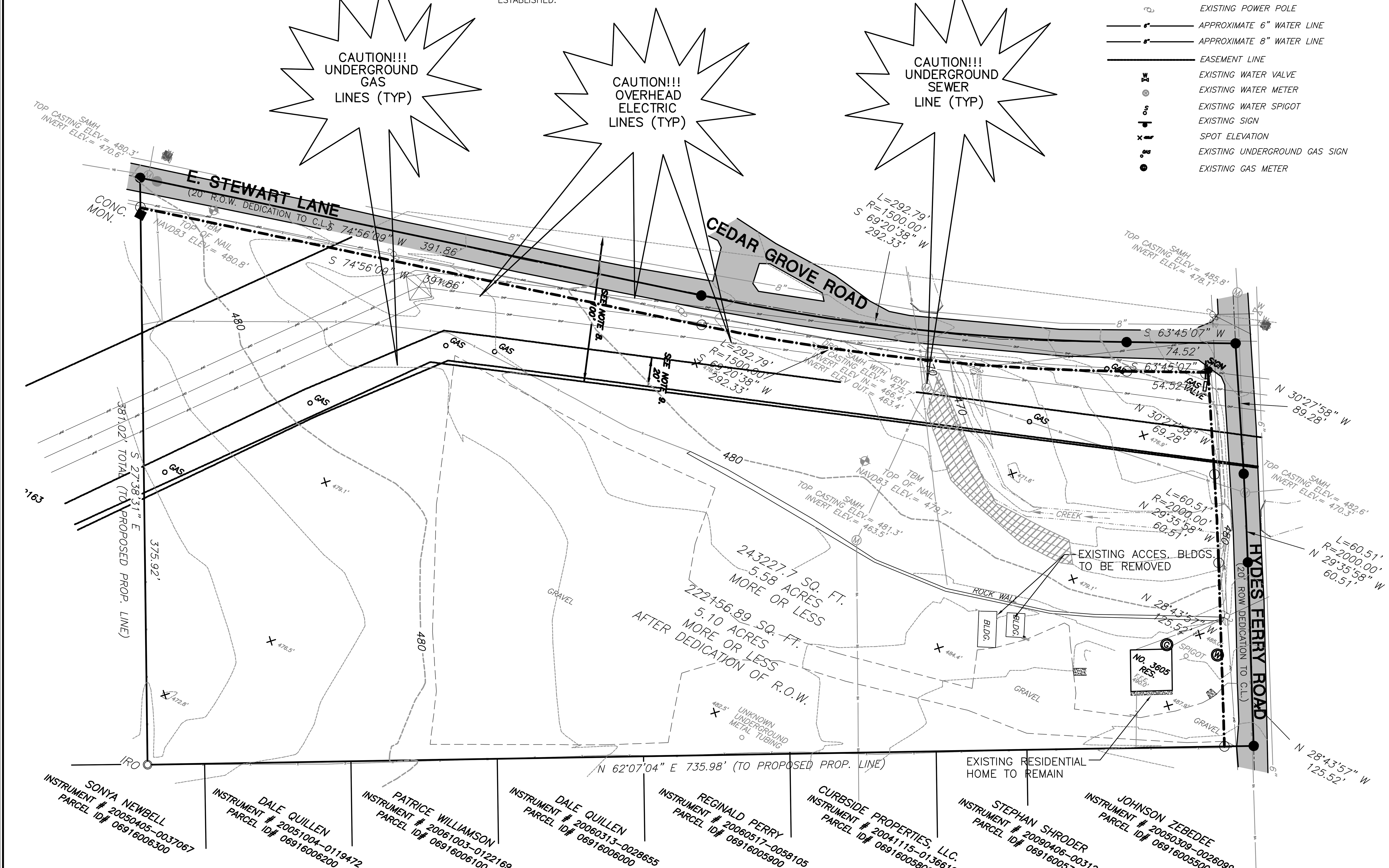

LEGEND

Symbol	Description
○	EXISTING PROPERTY CORNER
●	UNMONUMENTED POINT
	EXISTING PROPERTY LINE
	EXISTING FENCE
N.T.S.	NOT TO SCALE
OHP	EXISTING OVERHEAD UTILITY LINE
	EXISTING BUILDING
	EXISTING POWER POLE
6"	APPROXIMATE 6" WATER LINE
8"	APPROXIMATE 8" WATER LINE
	EASEMENT LINE
	EXISTING WATER VALVE
	EXISTING WATER METER
	EXISTING WATER SPIGOT
	EXISTING SIGN
	SPOT ELEVATION
GAS	EXISTING UNDERGROUND GAS SIGN
	EXISTING GAS METER

GENERAL NOTES

1. THE NECESSARY PERMITS FOR THE WORK SHOWN ON THESE SITE DEVELOPMENT PLANS WILL BE OBTAINED BY THE CONTRACTOR PRIOR TO COMMENCEMENT OF ANY WORK ON THIS PROJECT. THE CONTRACTOR SHALL GIVE ALL NECESSARY NOTICES AND OBTAIN ALL PERMITS AND PAY ALL FEES INVOLVED IN SECURING SAID PERMITS. HE SHALL ALSO COMPLY WITH ALL CITY, COUNTY AND STATE BUILDING LAWS, ORDINANCES OR REGULATIONS RELATING TO THE CONSTRUCTION OF PROJECTS SUCH AS THIS ONE.
2. THE CONTRACTOR SHALL BE RESPONSIBLE FOR AND SHALL BEAR ALL EXPENSES OF FIELD STAKING NECESSARY FOR SITE LAYOUT. ALL LAYOUT SHALL BE PERFORMED IN ACCORDANCE WITH DETAIL PLANS AS OUTLINED IN THE PROPOSED PROFILE PLAN PROPER PLANS SHOULD BE USED FOR ALL NEEDED STAKING
3. THE LOCATION OF EXISTING PIPING AND UNDERGROUND UTILITIES, SUCH AS WATER AND GAS LINES, ELECTRICAL AND TELEPHONE CONDUITS, ETC., ARE NOT SHOWN ON THIS PORTION OF THE PLANS BUT ARE AVAILABLE FROM THE EXISTING UTILITY PROVIDERS. HOWEVER, CIVIL DESIGN CONSULTANTS, LLC, THE CIVIL ENGINEER DOES NOT ASSUME RESPONSIBILITY THAT, DURING CONSTRUCTION, THE POSSIBILITY OF UTILITIES OTHER THAN THOSE SHOWN MAY BE ENCOUNTERED OR THAT ACTUAL LOCATION OF THOSE SHOWN MAY VARY SOMEWHAT FROM THE LOCATION DESIGNATED ON THIS PORTION OF THE PLANS. IN AREAS WHERE IT IS NECESSARY THAT THE EXACT LOCATIONS OF UNDERGROUND LINES BE KNOWN, THE CONTRACTOR SHALL, AT HIS OWN EXPENSE, FURNISH ALL LABOR AND TOOLS TO EITHER VERIFY AND SUBSTANTIATE OR DEFINITELY ESTABLISH THE LOCATION OF THE LINES.
4. THE CONTRACTOR MUST UNDERSTAND THAT THE WORK IS ENTIRELY AS HIS RISK UNTIL SAME IS ACCEPTED AND HE WILL BE HELD RESPONSIBLE FOR ITS SAFETY BY THE OWNER. THEREFORE, THE CONTRACTOR SHALL FURNISH AND INSTALL ALL NECESSARY TEMPORARY WORKS FOR THE PROTECTION OF THE WORK, INCLUDING BARRICADES, WARNING SIGNS, AND LIGHTS.
5. THE SITE DEVELOPMENT PORTION OF THIS PROJECT WILL BE SUBJECT TO THE INSPECTION AND FINAL APPROVAL OF APPROPRIATE DEPARTMENTS HAVING JURISDICTION WITHIN METRO NASHVILLE, DAVIDSON COUNTY.
6. IF, DURING THE CONSTRUCTION OF THE SITE DEVELOPMENT PORTION OF THIS PROJECT, A QUESTION OF INTENT OR CLARITY ARISES FROM EITHER THE PLANS OR SPECIFICATIONS, THE CONTRACTOR WILL IMMEDIATELY BRING THE MATTER TO THE ATTENTION OF THE CIVIL ENGINEER FOR RESOLUTION BEFORE THE AFFECTED WORK ITEMS ARE INITIATED OR PURSUED FURTHER.
7. THE CONTRACTOR WILL EXERCISE EXTREME CAUTION IN THE USE OF EQUIPMENT IN AND AROUND OVERHEAD POWER LINES. IF AT ANY TIME IN THE PURSUIT OF THIS WORK THE CONTRACTOR MUST WORK IN CLOSE PROXIMITY OF THE ABOVE–NOTED LINES, THE ELECTRIC AND/OR TELEPHONE COMPANIES SHALL BE CONTACTED PRIOR TO SUCH WORK AND THE PROPER SAFETY MEASURES TAKEN. A THOROUGH EXAMINATION OF THE OVERHEAD LINES IN THE PROJECT AREA SHOULD BE MADE BY THE CONTRACTOR PRIOR TO THE INITIATION OF CONSTRUCTION.
8. THE CONTRACTOR SHALL BE RESPONSIBLE FOR ANY DAMAGE DONE TO THE PREMISES OR ADJACENT PREMISES, OR INJURIES TO THE PUBLIC DURING THE CONSTRUCTION OF THE WORK, CAUSED BY HIMSELF, HIS SUBCONTRACTORS OR THE CARELESSNESS OF ANY OF HIS EMPLOYEES.
9. TOPSOIL STRIPPED FROM THE AREAS TO BE GRADED WILL BE STOCKPILED ON SITE, AT A SPOT TO BE FIELD DETERMINED BY THE CIVIL ENGINEER, AND SHALL LATER BE USED FOR SUBSEQUENT USE IN FINAL DRESSING AND SEEDBED PREPARATION. SAID STOCKPILES WILL BE LOCATED SO AS NOT TO INTERFERE WITH ACTIVITIES OF OTHER PORTIONS OF THE WORK ON THE PROJECT.
10. THE STOCKPILING OR STORAGE OF TREES, VEGETATION AND OTHER DELETERIOUS MATTER OR MATERIALS DEEMED "UNSUITABLE" BY THE SOILS AND CIVIL ENGINEERS SHALL NOT BE ALLOWED ON SITE. SAID MATERIALS SHALL BE PROPERLY DISPOSED OF OFF THE PROPERTIES, THE COST AND RESPONSIBILITY OF WHICH SHALL BE THE CONTRACTOR'S. SITE FOR THE DISPOSAL OF SAID MATERIALS SHALL FIRST BE APPROVED BY THE CIVIL ENGINEER.
11. THE PLACING AND SPREADING OF ANY FILL MATERIAL IS TO BE STARTED AT THE LOWEST POINT AND BROUGHT UP IN HORIZONTAL LAYERS OF 8–INCH THICKNESS. SAID FILL MATERIAL IS TO BE FREE OF SOD, ROOTS, FROZEN SOILS, OR ANY OTHER DECOMPOSABLE MATERIAL. THE RELATIVE COMPACTION OF EACH LAYER SHALL NOT BE LESS THAN 95% OF THE STANDARD PROCTOR MAXIMUM DRY DENSITY (ASTM D–698) IN ALL AREAS OF FILL, AND COMPACTION OF 100% OF SAME SPECIFICATION FOR MATERIALS USED IN THE UPPER 24 INCHES BENEATH PAVEMENT AND GRADE SLABS.

SITE PREPARATION NOTES:

1. BEFORE ANY CLEARING/GRUBBING WORK IS INITIATED, THE CONTRACTOR AND REPRESENTATIVES OF BOTH ARCHITECT AND CIVIL ENGINEER WILL "WALK–OUT" THE "LIMIT OF CLEAR LINE" AND INSURE THAT IT IS CLEARLY MARKED AND VISIBLE.
2. THE SCOPE OF CONTRACT SITE PREPARATION SHALL INCLUDE CLEARING AND GRUBBING, EXCAVATION AND DISPOSAL OF ALL REMOVED TREES, VEGETATION AND OTHER DELETERIOUS MATERIAL. THE SITE PREPARATION CONTRACTOR SHALL ACCOMPLISH GRADING TO REQUIRED SUBGRADE; HOWEVER, PROPOSED CONTOURS ARE SHOWN TO FINISH SURFACE GRADE.
3. TOPSOIL STRIPPED FROM THE AREAS TO BE GRADED WILL BE STOCKPILED ON SITE, AT A SPOT TO BE FIELD DETERMINED BY THE CIVIL ENGINEER, AND LATER BE USED FOR SUBSEQUENT USE IN FINAL DRESSING AND SEEDBED PREPARATION. SAID STOCKPILES WILL BE LOCATED SO AS NOT TO INTERFERE WITH ACTIVITIES OF OTHER PORTIONS OF WORK ON THE PROJECT.
4. THE STOCKPILING OR STORAGE OF TREES, VEGETATION AND OTHER DELETERIOUS MATERIALS DEEDED "UNSUITABLE" BY THE SOILS AND CIVIL ENGINEERS SHALL NOT BE ALLOWED ON SITE. SAID MATERIALS SHALL BE PROPERLY DISPOSED OF OFF THE PROPERTIES, THE COST AND RESPONSIBILITY OF WHICH SHALL BE THE CONTRACTOR'S. SITE FOR THE DISPOSAL OF SAID MATERIALS SHALL FIRST BE APPROVED BY THE CIVIL ENGINEER.

EXISTING CONDITIONS NOTE:

EXISTING CONDITIONS SHOWN ON THIS PLAN TAKEN FROM FIELD RUN SURVEY DATA COMPLETED ON JULY 27, 2009 BY JOSEPH BROWN, RLS OF BROWN LAND SURVEYING, LLC. . CIVIL DESIGN CONSULTANTS LLC, THIS ENGINEER, AND DRIVER CONSTRUCTION ASSUME NO LIABILITY AS TO THE COMPLETENESS OR ACCURACY OF WHAT IS SHOWN TO BE EXISTING. CONTRACTOR SHALL VERIFY IF NECESSARY ALL EXISTING CONDITIONS AND NOTIFY CIVIL ENGINEER IN THE EVENT THAT DISCREPENCIES EXIST.

NOTES:

1. *NORTH BASED ON TENNESSEE STATE PLANE COORDINATES 1983.*
2. *UNDERGROUND UTILITY LOCATIONS WERE TAKEN FROM FIELD LOCATIONS AND/OR APPROPRIATE GOVERNING AGENCIES AND ARE APPROXIMATE ONLY. BROWN LAND SURVEYING, LLC. DOES NOT CERTIFY THE EXACT LOCATION OF UTILITIES OR THAT ALL THE UTILITIES PRESENT ARE SHOWN ON THE SURVEY. PRECISE LOCATION OF UNDERGROUND UTILITIES IS RECOMMENDED PRIOR TO ANY CONSTRUCTION ON THIS PROPERTY. CALL TN–ONE CALL.*
3. *PROPERTY IS CURRENTLY ZONED "RS10". BUILDING SETBACK REQUIREMENTS SHOULD BE OBTAINED FROM METRO ZONING.*
4. *ELEVATIONS SHOWN ARE BASED ON NGVD83 VERTICAL DATUM.*
5. *PARCEL NUMBERS PERTAINS TO DAVIDSON COUNTY TAX MAPS.*
6. *NO ABSTRACT OF TITLE PROVIDED TO SURVEYOR. THERE MAY EXIST OTHER EASEMENTS (WRITTEN OR UNWRITTEN) OR DOCUMENTS OF RECORD THAT COULD EFFECT THIS PROPERTY.*
7. *PROPERTY SUBJECT TO RIGHT OF WAY OF HYDES FERRY ROAD AND E. STEWARTS LANE.*
8. *PROPERTY SUBJECT TO A 100' TVA POWER LINE EASEMENT. THIS SURVEYOR WAS UNABLE TO LOCATE DOCUMENT. EASEMENT WIDTH OBTAINED FROM DEED BOOK 5920, PAGE 90.*
9. *PROPERTY SUBJECT TO A 20' RIGHT OF WAY AGREEMENT TO TENNESSEE NATURAL GAS LINES, INC. RECORDED IN DEED BOOK 5920, PAGE 90.*

DEMOLITION NOTES:

1. THE CONTRACTOR WILL BE REQUIRED TO REMOVE ALL EXCAVATED MATERIALS AND SUCH ITEMS SHALL BECOME THE PROPERTY OF THE CONTRACTOR. ALL ITEMS SHALL BE PROPERLY DISPOSED OF AT AN OFF–SITE LOCATION. THE CONTRACTOR SHALL OUTLINE ANY AND ALL POSSIBLE HAUL ROUTES AND SHALL BE PREPARED TO SUBMIT SUCH TO THE METRO NASHVILLE DEPT. OF PUBLIC WORKS, THE CIVIL ENGINEER AND OTHER AUTHORITIES FOR APPROVAL.
2. IF, AT ANY TIME, PRIOR TO OR DURING THE DEMOLITION WORK, HAZARDOUS MATERIAL IS ENCOUNTERED, THE CONTRACTOR SHALL NOTIFY THE CIVIL ENGINEER.
3. THE CONTRACTOR SHALL NOTIFY ADJACENT OWNERS OF WORK WHICH MAY AFFECT THEIR PROPERTY, POTENTIAL NOISE, UTILITY OUTAGE OR DISRUPTION. SUCH OPERATIONS SHALL BE CONDUCTED BY THE CONTRACTOR WITH MINIMUM INTERFERENCE TO ADJACENT OWNERS. ADJACENT EGRESS AND ACCESS SHALL BE PROPERLY MAINTAINED AT ALL TIMES. DO NOT CLOSE OR OBSTRUCT ANY ROADWAYS, PARKING OR SIDEWALKS WITHOUT PERMISSION FROM THE ADJACENT OWNERS OR METRO NASHVILLE DEPARTMENT OF PUBLIC WORKS.
4. PRIOR TO THE COMMENCEMENT OF DEMOLITION/GRADING OPERATIONS, ALL OVERHEAD AND UNDERGROUND UTILITIES SHALL BE LOCATED. ALL REMOVAL AND/OR RELOCATION OF UTILITIES SHALL BE COORDINATED WITH THE RESPECTIVE UTILITY COMPANIES.
5. ALL UTILITIES , UTILITY POLES, AND TRAFFIC SIGNALS WITHIN PUBLIC R.O.W. SHALL REMAIN.

IF YOU DIG TENNESSEE...
CALL US FIRST!
1-800-351-1111
1-615-366-1987
TENNESSEE ONE CALL
IT'S THE LAW

0 40 80 120

CIVIL DESIGN CONSULTANTS, LLC
CIVIL ENGINEERS • LAND PLANNERS
CIVIL-DESIGN-CONSULTANTS, LLC
8170 COLEY DAVIS RD., NASHVILLE, TN. 37221
PHONE: (615) 319-2734EMAIL: CIVILCONSULTANTS@BELLSOUTH.NET

JARED R. GRAY — REGISTERED ENGINEER — No. 108403 — STATE OF TENNESSEE

KELLY DRIVER SR. RETIREMENT

DEVELOPMENT PLAN – 3605 HYDES FERRY PIKE

2nd COUNCIL DISTRICT

METRO NASHVILLE, DAVIDSON COUNTY TENNESSEE

EXISTING CONDITIONS & DEMOLITION PLAN

2	11-14-09 (JRG) Rev. Per City Comments.
1	08-18-09 (JRG) Rev. Per City Comments.
REVISIONS	
DESIGNED BY:	J. GRAY
DRAWN BY:	J. GRAY
APPROVED BY:	J. GRAY
SCALE:	1"=40'
DATE:	July 10, 2009
JOB NO. 09-005	WK. ORDER 001
SHEET NO.	02 of 06

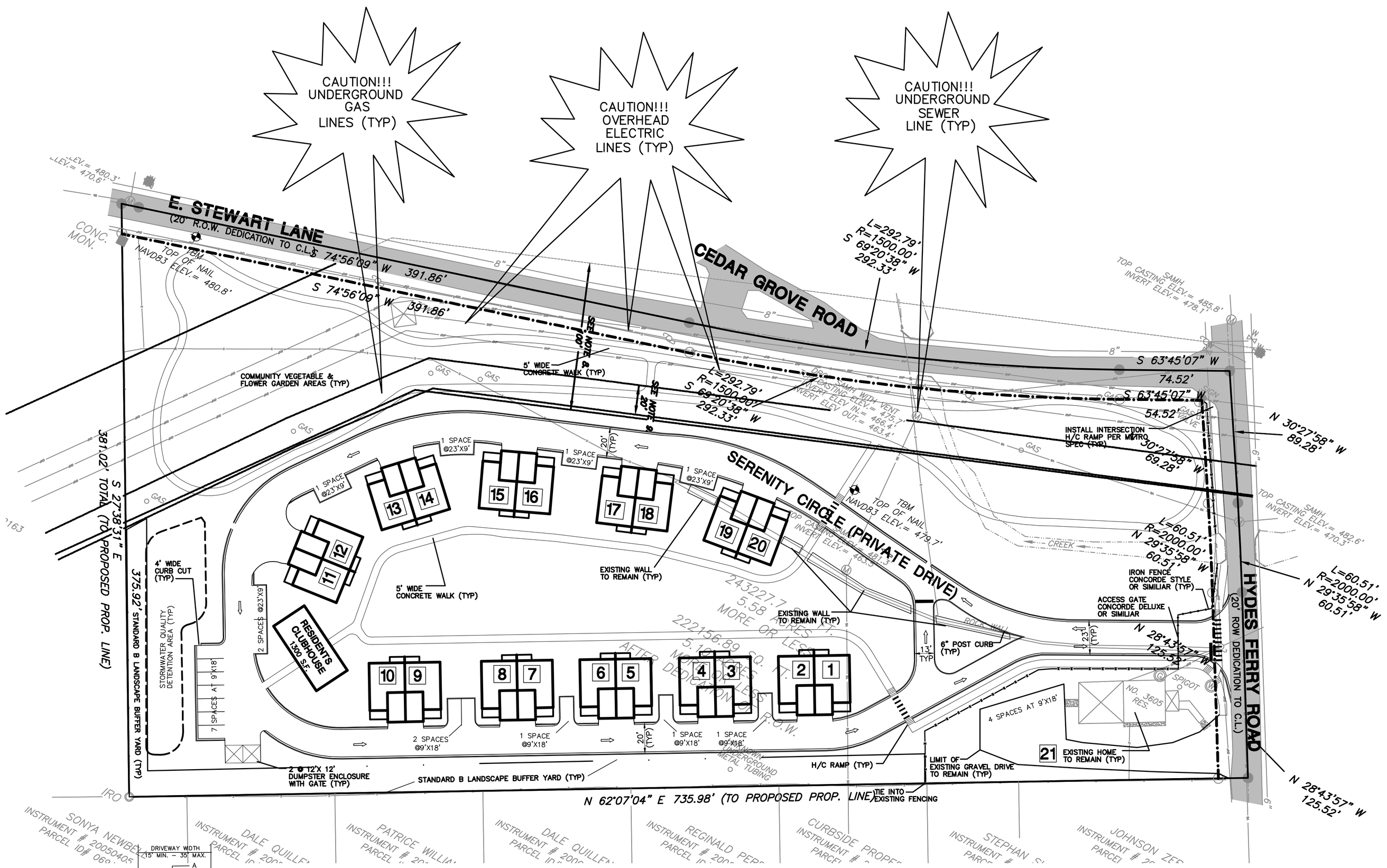

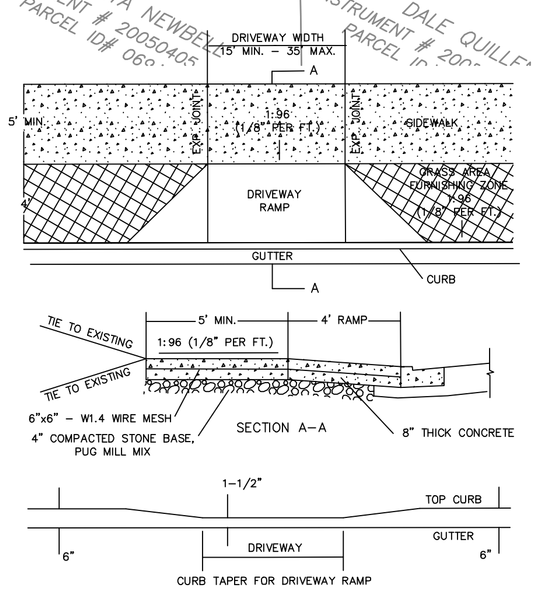

1. CROSS-SLOPE OF SIDEWALK SHALL NOT EXCEED 1:48 (VERTICAL:HORIZONTAL).
2. FIBER MESH REINFORCEMENT IS AN APPROVED ALTERNATIVE FOR THE WIRE MESH. FIBER MESH REINFORCEMENT WILL BE ADDED TO THE CONCRETE AT THE BATCH PLANT AT THE RATE OF 1#POUNDS PER CUBIC YARD.
3. CONCRETE SHALL BE 8 INCHES THICK.

CONCRETE RAMP METRO ST-324

NOT TO SCALE

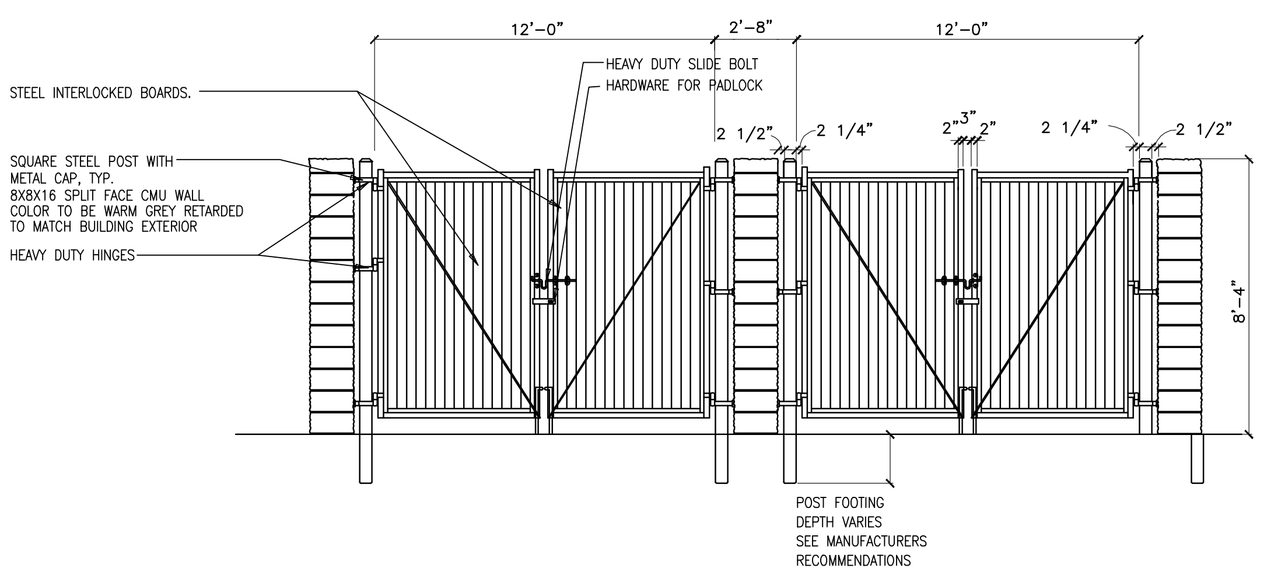

DUMPSTER SCREEN ELEVATION

NOT TO SCALE

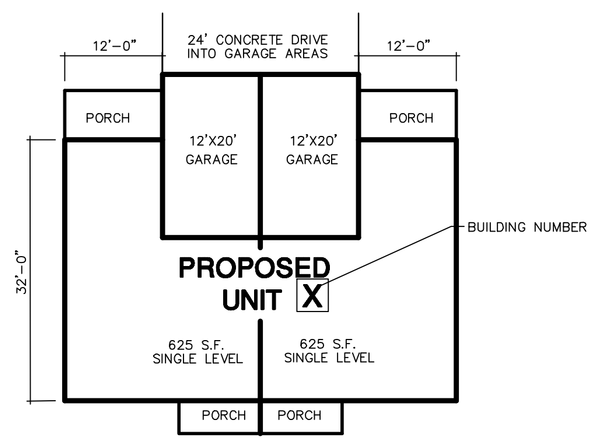

TYPICAL BUILDING FOOTPRINT DETAIL

NOT TO SCALE

PARKING DATA:

REQUIRED PARKING: 1 SPACE PER HOME=21 SPACES
PARKING PROVIDED: 22 SPACES NOT INCL. GARAGE

LANDSCAPE NOTE

LANDSCAPE PLANS PER METRO REQUIREMENTS WILL BE SUBMITTED FOR REVIEW AND APPROVAL WITH THE FINAL SITE PLAN FULLY ADDRESSING ANY COMMENTS FROM THE URBAN FORESTER.

SIDEWALK CROSSING NOTE

SIDEWALKS ARE REQUIRED TO CROSS THE EXISTING BLUE LINE STREAM ALONG HYDE'S FERRY ROAD. CONSTRUCTION DETAILS SHALL BE SUBMITTED WITH THE FINAL SITE PLAN.

PAVEMENT NOTE

ALL PAVEMENT, SIDEWALKS, AND PATIO AREAS TO BE CONCRETE

CONSTRUCTION SCHEDULE:
1. PRE-CONSTRUCTION MEETING
2. INSTALLATION OF EROSION CONTROL
3. EROSION INSPECTION BY EPSC AND METRO
4. ISSUANCE OF GRADING PERMIT
5. CONSTRUCTION - (EXPECTED COMPLETION 12 TO 15 MONTHS) IF CONSTRUCTION IS NOT COMPLETE IN THE SPECIFIED TIME, IT IS THE RESPONSIBILITY OF THE CONTRACTOR TO APPLY FOR AN EXTENSION OF THE GRADING PERMIT.

GENERAL LAYOUT NOTES:

1. THE CONTRACTOR SHALL CHECK ALL FINISHED GRADES AND DIMENSIONS IN THE FIELD AND REPORT ANY DISCREPANCIES TO THE OWNER'S REPRESENTATIVE PRIOR TO BEGINNING WORK.
2. THE CONTRACTOR SHALL VERIFY THE EXACT LOCATION OF ALL EXISTING UTILITIES. TAKE CARE TO PROTECT UTILITIES THAT ARE TO REMAIN. REPAIR CONTRACTOR CAUSED DAMAGE ACCORDING TO LOCAL STANDARDS AND AT THE CONTRACTOR'S EXPENSE. COORDINATE ALL CONSTRUCTION WITH THE APPROPRIATE UTILITY COMPANY.
3. THE CONTRACTOR SHALL CONFORM TO ALL LOCAL CODES AND OBTAIN ALL PERMITS PRIOR TO BEGINNING WORK.
4. PROVIDE A SMOOTH TRANSITION BETWEEN EXISTING PAVEMENT AND NEW PAVEMENT. FIELD ADJUSTMENT OF FINAL GRADES MAY BE NECESSARY. INSTALL ALL UTILITIES PRIOR TO INSTALLATION OF PAVEMENT.
5. ALL DAMAGE TO EXISTING ASPHALT PAVEMENT TO REMAIN, WHICH RESULTS FROM NEW CONSTRUCTION, SHALL BE REPLACED WITH LIKE MATERIALS AT CONTRACTOR'S EXPENSE.
6. DIMENSIONS ARE TO THE EDGE OF ASPHALT UNLESS OTHERWISE NOTED.
7. CONTRACTOR SHALL EXERCISE EXTREME CAUTION IN THE USE OF EQUIPMENT IN AND AROUND OVERHEAD ELECTRICAL WIRES AND SERVICES. IF AT ANY TIME IN THE PURSUIT OF THIS WORK, THE CONTRACTOR MUST WORK IN CLOSE PROXIMITY OF THE ABOVE NOTED WIRES, THE ELECTRICAL COMPANY SHALL BE CONTACTED PRIOR TO SUCH WORK AND THE PROPER SAFETY MEASURES TAKEN.
8. IN EASEMENTS AND RIGHTS-OF-WAY, CONTRACTOR SHALL PROTECT AND RESTORE SAID PROPERTY TO A CONDITION SIMILAR OR EQUAL TO THAT EXISTING AT THE COMMENCEMENT OF CONSTRUCTION EXCEPT AS NOTED.
9. THE CONTRACTOR SHALL COMPLY WITH ALL PERTINENT PROVISIONS OF THE "MANUAL OF ACCIDENT PREVENTION IN CONSTRUCTION" ISSUED BY AOC OF AMERICA, INC. AND THE "SAFETY AND HEALTH REGULATIONS FOR CONSTRUCTION" ISSUED BY THE U.S. DEPARTMENT OF LABOR.

SITE DATA

1. SUBJECT PROPERTY IS PRESENTLY SHOWN AS A PORTION OF PARCEL 069-16, OF THE THE DAVIDSON COUNTY PROPERTY TAX MAP 54.
2. SUBJECT PROPERTY IS PRESENTLY ZONED RS10 - RESIDENTIAL SINGLE FAMILY
3. TOPOGRAPHIC AND BOUNDARY INFORMATION ARE TAKEN FROM FIELD RUN SURVEYS BY BROWN LAND SURVEYING, LLC AND AVAILABLE AS-BUILT INFORMATION.
4. SEND ALL CORRESPONDENCE TO THE FOLLOWING:

OWNER/DEVELOPER:
MR. MARK DRIVER
3968 HIGHWAY 49 E
CHARLOTTE, TN 37036
615-364-8129

ENGINEER:
MR. JARED GRAY, PE
CIVIL DESIGN CONSULTANTS, LLC
8170 COLEY DAVIS ROAD
NASHVILLE, TN. 37221
615-646-2913

FEMA NOTE:

SUBJECT PROPERTY IS NOT AFFECTED BY THE 100 YEAR FLOOD PLAIN, AS PER N.F.I.P. MAP #47037C0204F, DATED APRIL 20, 2001.

IF YOU DIG TENNESSEE...
CALL US FIRST!
1-800-351-1111
1-615-366-1987
TENNESSEE ONE CALL
IT'S THE LAW

0 40 80 120

CIVIL DESIGN CONSULTANTS, LLC
CIVIL ENGINEERS - LAND PLANNERS
8170 COLEY DAVIS ROAD, NASHVILLE, TN. 37221
PHONE: (615) 646-2913 FAX: (615) 646-2914

JARED R. GRAY REGISTERED ENGINEER No. 108405 STATE OF TENNESSEE

KELLY DRIVER SR. RETIREMENT

3605 HYDES FERRY PIKE
2nd COUNCIL DISTRICT
METRO NASHVILLE, DAVIDSON COUNTY TENNESSEE

DEVELOPMENT PLAN - STAKEOUT PLAN

2	10-30-09 (JRG) Rev. Per City Comments.
1	08-18-09 (JRG) Rev. Per City Comments.
REVISIONS	
DESIGNED BY:	J. GRAY
DRAWN BY:	J. GRAY
APPROVED BY:	J. GRAY
SCALE:	1"=40'
DATE:	July 10, 2009
JOB NO.	WK. ORDER
09-005	001

SHEET NO.
03 of 06

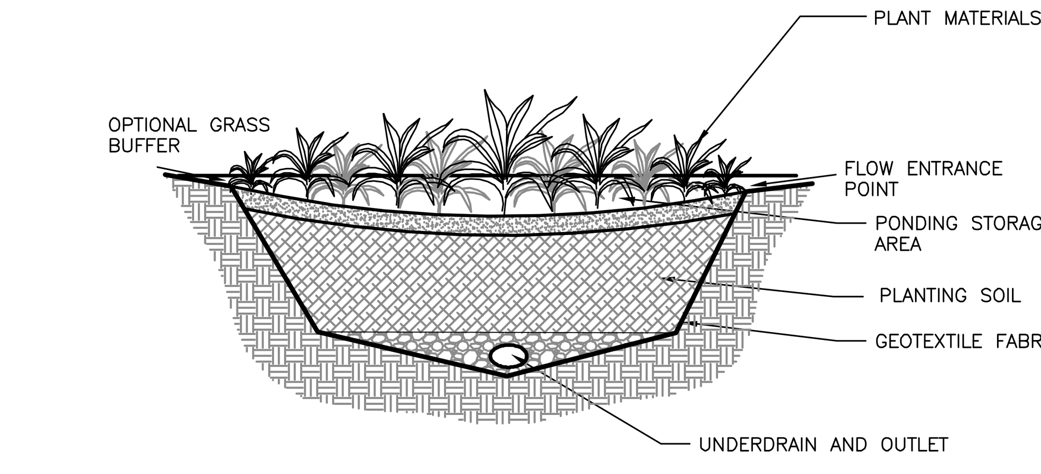

BIO-INFILTRATION DRAIN
NOT TO SCALE

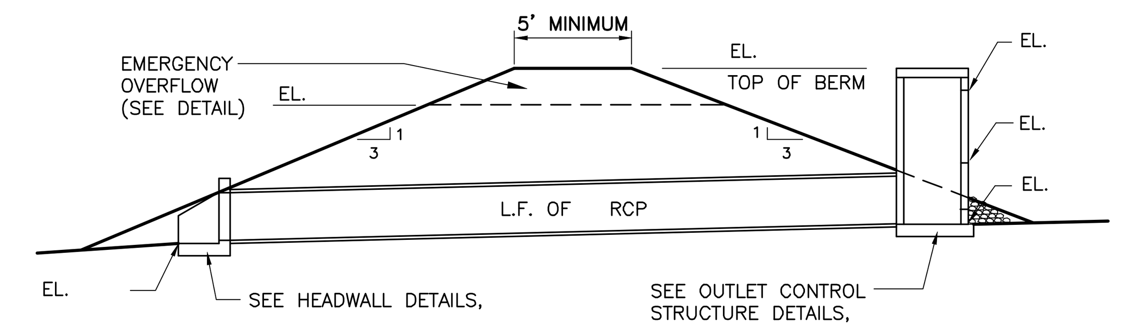

BERM/OUTLET DRAINAGE SECTION
NOT TO SCALE

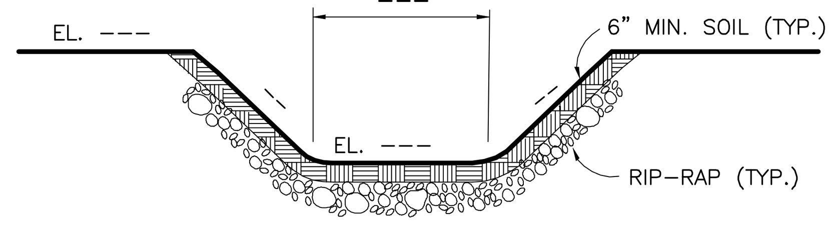

EMERGENCY OVERFLOW - POND
NOT TO SCALE

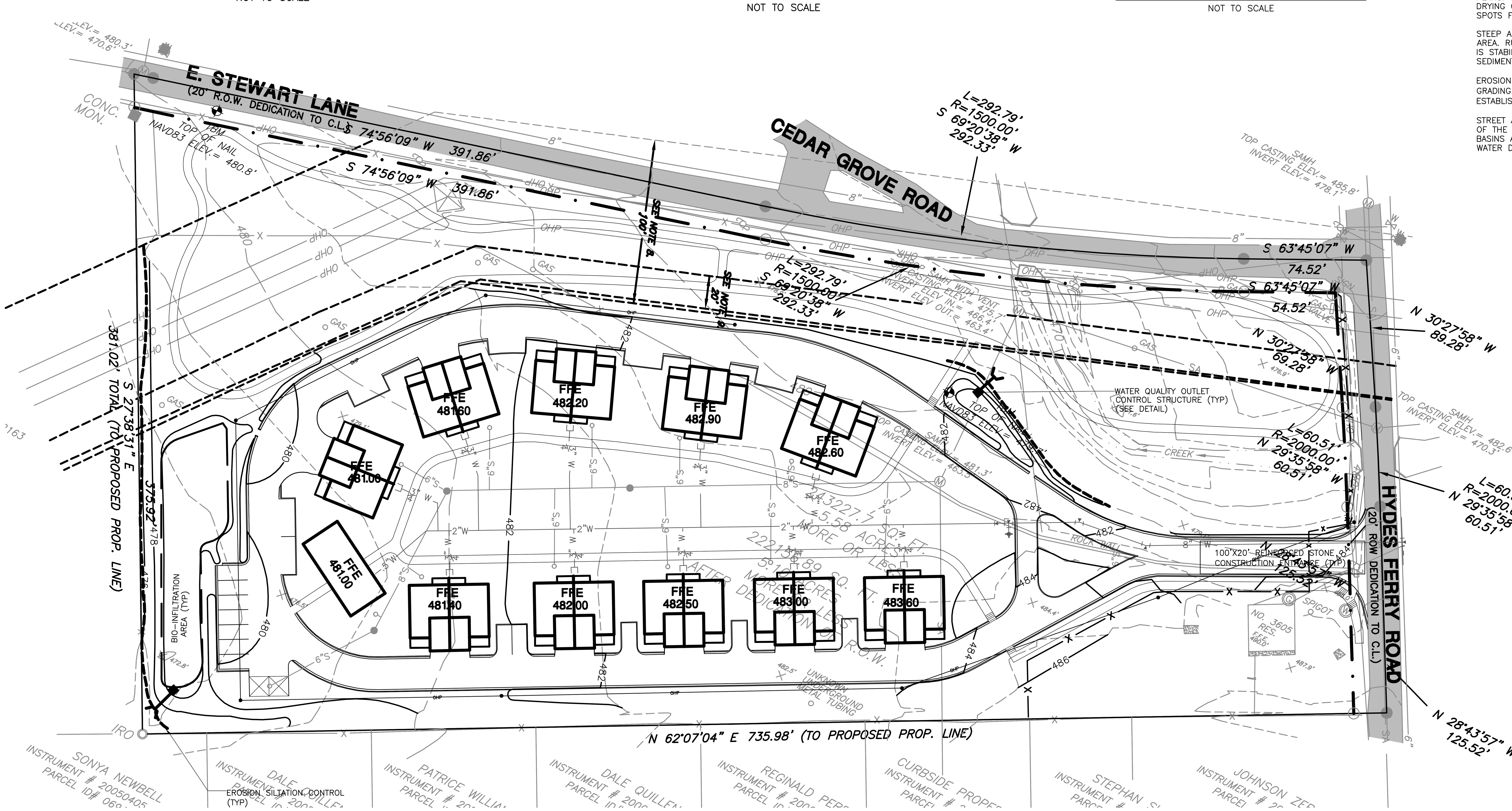

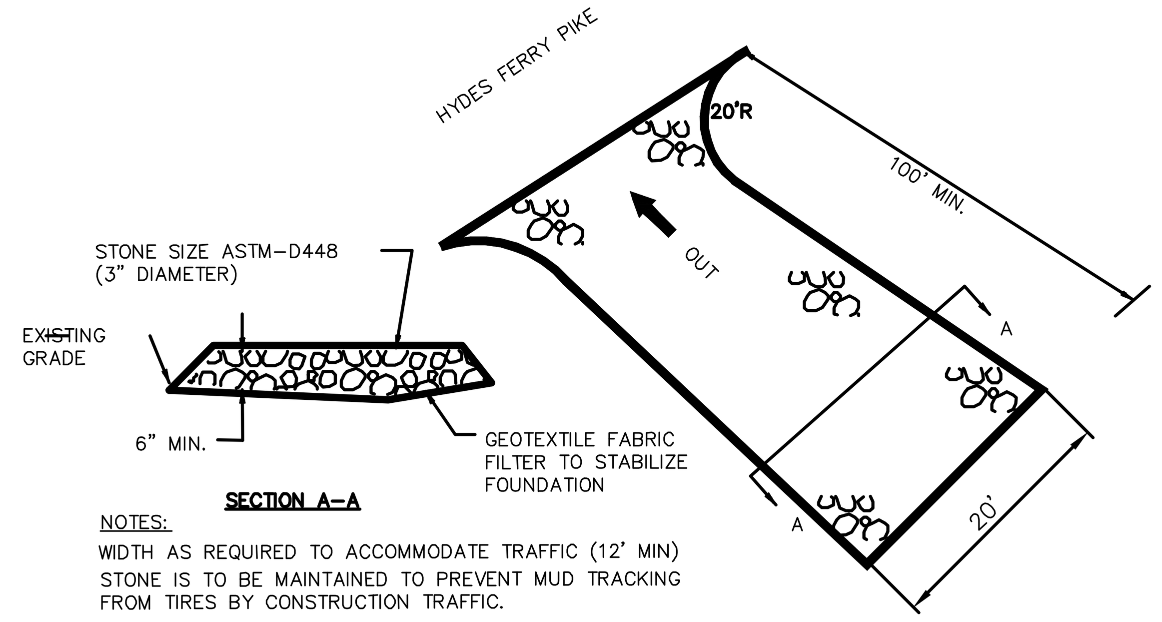

NOTES:
WIDTH AS REQUIRED TO ACCOMMODATE TRAFFIC (12' MIN)
STONE IS TO BE MAINTAINED TO PREVENT MUD TRACKING FROM TIRES BY CONSTRUCTION TRAFFIC.

TEMPORARY CONSTRUCTION CROSSING
NOT TO SCALE

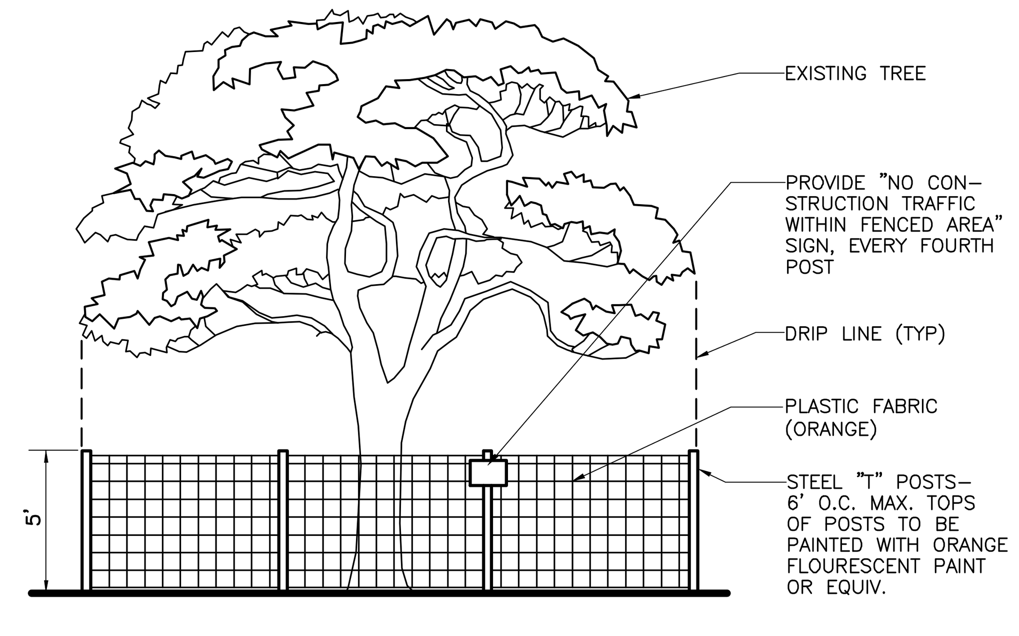

TREE PROTECTION DETAIL
NOT TO SCALE

NOTE:
ALL TREE PROTECTION FENCING SHALL BE IN PLACE PRIOR TO THE ISSUANCE OF A GRADING PERMIT. AND SHALL BE MAINTAINED IN GOOD WORKING ORDER UNTIL ALL CONSTRUCTION ACTIVITY IS COMPLETED. ANY REQUIRED EROSION CONTROL MEASURES SHALL BE PLACED OUTSIDE OF ANY TREE PROTECTION FENCING.

WATER QUALITY DEVICE AS-BUILT NOTE:
IN ACCORDANCE WITH THE METRO STORM WATER MANAGEMENT MANUAL, VOLUME 1, SECTION 3.9, AS-BUILTS CERTIFICATIONS, MWS STORM WATER DIVISION MUST APPROVE THE FOLLOWING AS-BUILTS PRIOR TO ISSUANCE OF THE USE & OCCUPANCY PERMIT:
- UNDERGROUND DETENTION AND WATER QUALITY INFRASTRUCTURE
- ABOVE GROUND DETENTION AND WATER QUALITY INFRASTRUCTURE
- PUBLIC STORM SEWER INFRASTRUCTURE
- CUT & FILL IN THE FLOOD PLAIN
- SINK HOLE ALTERATIONS

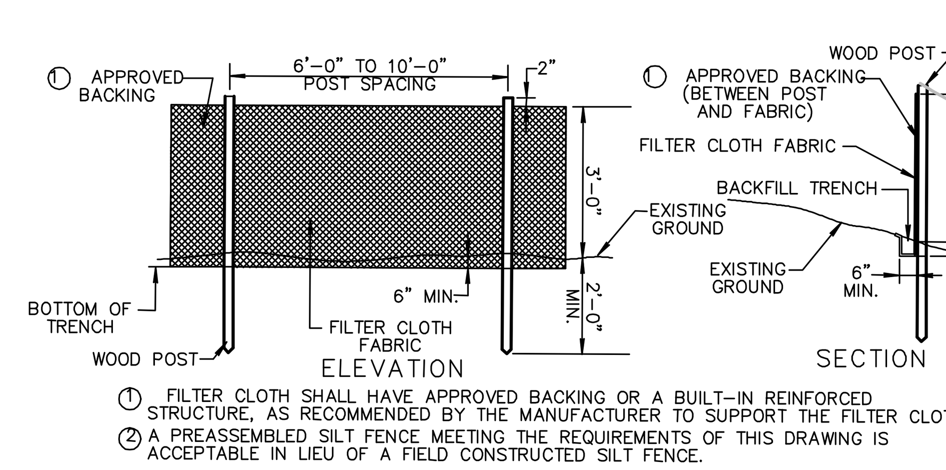

① FILTER CLOTH SHALL HAVE APPROVED BACKING OR A BUILT-IN REINFORCED STRUCTURE, AS RECOMMENDED BY THE MANUFACTURER TO SUPPORT THE FILTER CLOTH.
② A PREASSEMBLED SILT FENCE MEETING THE REQUIREMENTS OF THIS DRAWING IS ACCEPTABLE IN LIEU OF A FIELD CONSTRUCTED SILT FENCE.

EROSION/SILTATION FENCING
NOT TO SCALE

BEST MANAGEMENT PRACTICES (BMP):

LAND CLEARING SHALL TAKE PLACE ONLY IN AREAS WHERE ACTIVE CONSTRUCTION WILL BEGIN WITHIN A REASONABLE AMOUNT OF TIME. LAND CLEARING DURING THE RAINY SEASON SHALL BE AVOIDED IN SENSITIVE AREAS SUCH AS STEEP SLOPES AND BUFFERS, IF POSSIBLE.

ANY NATURAL WATERCOURSE ON SITE SHALL NOT BE DISTURBED UNLESS ABSOLUTELY NECESSARY.

DENUDED AREAS, SOIL STOCKPILES, DIKES, DAMS, CHANNELS, ETC., ARE TO BE SEEDED AND MULCHED. AREAS AND TIME OF EXPOSURE OF UNPROTECTED SOILS SHALL BE KEPT TO A MAXIMUM OF 15 DAYS. SUCH AREAS ARE TO IMMEDIATELY RECEIVE SEED AND MULCH STABILIZATION FOLLOWING THIS TIME PERIOD. ON STEEP SLOPES AND CHANNELS, SOD SHALL BE FASTENED TO THE GROUND WITH WIRE STAPLES OR WOOD PEGS. WHERE SURFACE WATER CANNOT BE DIVERTED FROM FLOWING OVER THE FACE OF SLOPES, INSTALL A STRIP OF HEAVY JUTE OR PLASTIC NETTING AND FASTEN TIGHT ALONG THE CROWN OR TOP OF THE SLOPE FOR EXTRA PROTECTION AGAINST LIFTING AND UNDERCUTTING OF SOD.

SUITABLE BARRICADES AND GAURDS SHALL BE ERECTED TO PREVENT EQUIPMENT OR MATERIAL FROM BEING PLACED ON ANY PLANTED AREA.

PLASTIC LINING SHALL BE USED ON ALL DITCHES AND EXPOSED SURFACES WHEN TIME DOES NOT PERMIT THE CONTRACTOR TO USE SEED AND MULCH FOR STABILIZATION.

SLOPE AND DITCHES THAT ARE CONSTRUCTED TO FINAL SUB-GRADE OR A PORTION OF ANY SLOPE OR DITCH THAT IS CONSTRUCTED TO SUB-GRADE SHALL IMMEDIATELY RECEIVE TOPSOIL AND FINAL STABILIZATION. ALL SLOPES ARE TO RECEIVE SEED AND MULCH. ALL DITCHES SHALL RECEIVE STABILIZATION AS INDICATED ON THE CONSTRUCTION PLANS. THE CONTRACTOR SHALL BE RESPONSIBLE FOR WATERING SEEDED AREAS TO PREVENT THE SOIL FROM DRYING OUT UNTIL APPROVED AND ACCEPTED. THE CONTRACTOR SHALL BE RESPONSIBLE FOR RE-SEEDING BARE SPOTS FOR A PERIOD OF ONE YEAR AFTER INSTALLATION OR ACCEPTANCE OF THIS PROJECT.

STEEP AND UNSTABLE SLOPES SHALL NOT BE DISTURBED IF THEY ARE OUTSIDE OF THE APPROVED GRADING PLAN AREA. RUNOFF SHALL BE CONVEYED FROM THE TOP OF THE SLOPE IN A SAFE MANNER ENSURING THAT THE SLOPE IS STABILIZED AS SOON AS POSSIBLE. ALL RUNOFF EXITING THE CONSTRUCTION SITE SHALL BE FREE OF EXCESSIVE SEDIMENT, AND OTHER POLLUTANTS.

EROSION CONTROL BARRIERS (SILT FENCE) SHALL BE PLACED WHERE INDICATED PRIOR TO CLEARING, GRUBBING, GRADING. EROSION CONTROL BARRIERS (SILT FENCE) SHALL BE ADJUSTED AND PLACED ALONG THE NEWLY ESTABLISHED CONTOURS UNTIL THE DEVELOPMENT IS STABILIZED (SEE EROSION/SILTATION CONTROL NOTES)

STREET AND/OR CURB INLET PROTECTION DEVICES SHALL BE PLACED AROUND ALL INLETS UPON THE CONSTRUCTION OF THE STORM WATER SEWER SYSTEM. GRATE INLET SKIMMER BOXES WILL BE PLACED AT ALL INLETS. ALL CATCH BASINS AND CONNECTIONS HAVE BEEN DESIGNED TO CONVEY AT LEAST THE 10-YEAR DESIGN-STORM EVENT. STORM WATER DRAINAGE SHALL BE CONVEYED TO THE DETENTION POND.

EROSION/SILTATION CONTROL NOTES

1. AREAS AND TIME OF EXPOSURE OF UNPROTECTED SOILS SHALL BE KEPT TO A MAXIMUM OF 15 DAYS.
2. KEEP DUST WITHIN TOLERABLE LIMITS BY SPRINKLING OR OTHER ACCEPTABLE MEANS.
3. USE TEMPORARY VEGETATION AND/OR MULCH TO PROTECT BARE AREAS FROM EROSION DURING CONSTRUCTION.
4. NO OTHER WORK WILL BE INITIATED ON THE PROJECT UNTIL THE EROSION/SILTATION MEASURES SHOWN ON THE PLANS AND DETAILS ARE PROPERLY IN PLACE.
5. STRAW BALES SHOWN THUS ▬ ▬ ARE TO BE USED AS TEMPORARY SEDIMENT BARRIERS. STRAW BALES ARE TO BE FIRM AND SECURELY TIED WITH PLASTIC OR WIRE BINDING. BALES ARE TO BE PLACED TOUCHING AND FIRMLY ANCHORED TO THE GROUND WITH STEEL DRIFT PINS OR WOODEN STAKES AS SHOWN IN DETAIL.
6. IF, AT ANY TIME DURING THE CONSTRUCTION PHASE OF THIS PROJECT, THE EROSION/SILTATION MEASURES INSTALLED FAIL TO FUNCTION PROPERLY, NEED MAINTENANCE OR REPAIR, OR NEED NEW REPLACEMENT IN KIND, THE CONTRACTOR WILL EFFECT SUCH ACTIONS AS ARE NEEDED TO CORRECT THE SITUATION AT NO ADDITIONAL COST TO THE OWNER.
7. DISTURBED AREAS ARE TO BE GRADED TO DRAIN AS INDICATED ON PLAN TO SEDIMENT BARRIERS DURING AND UPON COMPLETION OF CONSTRUCTION.
8. ALL CUT/FILL AREAS TO HAVE A MINIMUM OF 6-INCH DEPTH TOPSOIL COVER. AREAS DRESSED WITH TOPSOIL WILL RECEIVE 12 POUNDS PER 1000 SQUARE FEET OF 6-12-12 FERTILIZER, 5 POUNDS OR MORE OF KENTUCKY 31 FESCUE SEED PER 1000 SQUARE FEET AND A STRAW MULCH OF 70%-80% COVERAGE (APPROXIMATELY 125 POUNDS PER 1000 SQUARE FEET) EXCEPT AS OTHERWISE DETERMINED BY PLAN.
9. UPON STABILIZATION OF THE PROJECT SITE WITH A GOOD (ACCEPTABLE) STAND OF GRASS AND/OR GROUND COVER, THE EROSION/SILTATION INSTALLATIONS WILL BE REMOVED AND THE AREA DISTURBED WILL BE SEEDED AND MULCHED WITH THE SAME TREATMENT AS OTHER NEW GRASSED AREAS OF THE PROJECT.
10. A STONE ACCESS RAMP IS TO BE CONSTRUCTED AT THE SITE ENTRANCE WITH A MINIMUM WIDTH OF 20 FEET AND MINIMUM LENGTH OF 100 FEET. RAMP IS TO BE BASED WITH 6 INCHES OF ASTM D 448, SIZE NO. 1 STONE, AND MAINTAINED THROUGHOUT CONSTRUCTION.
11. PRIOR TO THE ISSUANCE OF A GRADING PERMIT, ALL EROSION/SILTATION CONTROL MEASUREMENTS INDICATED ON THE PLANS SHALL BE INSTALLED.

SIDEWALK CROSSING NOTE

SIDEWALKS ARE REQUIRED TO CROSS THE EXISTING BLUE LINE STREAM ALONG HYDE'S FERRY ROAD. CONSTRUCTION DETAILS SHALL BE SUBMITTED WITH THE FINAL SITE PLAN.

CONCRETE WASH DOWN/EQUIPMENT FUELING NOTE:

CONTRACTOR TO PROVIDE AN AREA FOR CONCRETE WASH DOWN AND EQUIPMENT FUELING IN ACCORDANCE WITH METRO CP-10 AND CP-13 RESPECTIVELY. CONTRACTOR TO COORDINATE EXACT LOCATION WITH NPDES DEPARTMENT DURING PRECONSTRUCTION MEETING.

POST CONSTRUCTION BMP/WATER QUALITY NOTE:

TO MEET THE METRO DEPARTMENT OF STORMWATER QUALITY REGULATIONS, A STORM DRAINAGE TREATMENT SYSTEM SHALL BE INSTALLED. DUE TO HAVING AVAILABLE SITE AREA FOR NATURAL DRAINAGE, ON-SITE STORM DRAINAGE SHALL BE DIRECTED TO A REINFORCED STORMWATER TREATMENT DRY WELL WITH BMP OUTLET. THESE STRUCTURES ARE DESIGNED TO SEPARATE CONTAMINATED EFFLUENT FROM THE STORMWATER DRAINAGE THROUGH PHYDOREMEDIATION AND ABSORBTION OF THE CONTAMINATED EFFLUENT INTO THE ROOT SYSTEM OF VEGETATION. THIS SYSTEM WILL CONTROL THE POLLUTANT LEVELS AND CONTROL DISCHARGE VELOCITIES FROM STORMWATER RUNOFF. THE SITE OWNER SHALL BE RESPONSIBLE FOR MAINTAINING ALL STORMWATER QUALITY AND DETENTION SURFACES ON THIS SITE PER THE METRO DEPARTMENT OF STORMWATER REGULATIONS.

I, JARED GRAY, PE , CERTIFIED EROSION CONTROL SPECIALIST, HAVE REVIEWED THE PLAN FOR SUFFICIENT ON SITE TEMPORARY EROSION AND SEDIMENT CONTROL PROVISIONS. ADDITIONAL MEASURES MAY BE REQUIRED AS FIELD CONDITIONS WARRANT.

EROSION CONTROL SPECIALIST DATE

AS THE DESIGN ENGINEER RESPONSIBLE FOR THE DEVELOPMENT OF THESE PLANS, I DO HEREBY CERTIFY THAT THIS DEVELOPMENT WILL DISTURB ONE (1) OR MORE ACRES, AND A N.O.I. HAS BEEN FILED WITH THE STATE OF TENNESSEE.

ENGINEER DATE

IF YOU DIG TENNESSEE...
CALL US FIRST!
1-800-351-1111
1-615-366-1987
TENNESSEE ONE CALL
IT'S THE LAW

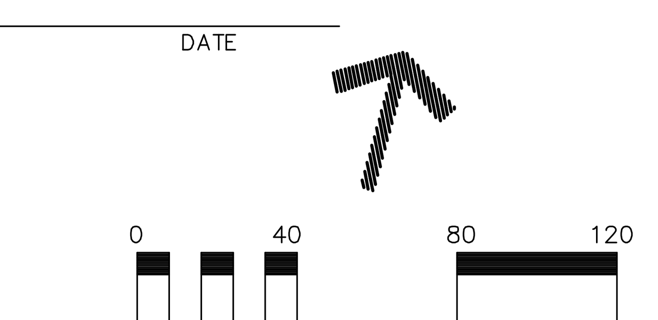

CIVIL DESIGN CONSULTANTS, LLC
CIVIL ENGINEERS • LAND PLANNERS
CIVIL-DESIGN-CONSULTANTS, LLC
8170 COLEY DAVIS RD., NASHVILLE, TN. 37221
PHONE: (615) 319-2734EMAIL: CIVILCONSULTANTS@BELLSOUTH.NET

JARED R. GRAY
REGISTERED ENGINEER
AGRICULTURE COMMERCE
No. 108403
STATE OF TENNESSEE

KELLY DRIVER SR. RETIREMENT

DEVELOPMENT PLAN – 3605 HYDES FERRY PIKE
2nd COUNCIL DISTRICT
METRO NASHVILLE, DAVIDSON COUNTY TENNESSEE

GRADING, DRAINAGE & EROSION CONTROL PLAN

② 10-30-09 (JRG) Rev. Per City Comments.	
① 08-18-09 (JRG) Rev. Per City Comments.	
REVISIONS	
DESIGNED BY:	J. GRAY
DRAWN BY:	J. GRAY
APPROVED BY:	J. GRAY
SCALE:	1"=40'
DATE:	July 10, 2009
JOB NO. 09-005	WK. ORDER 001
SHEET NO.	04 of 06

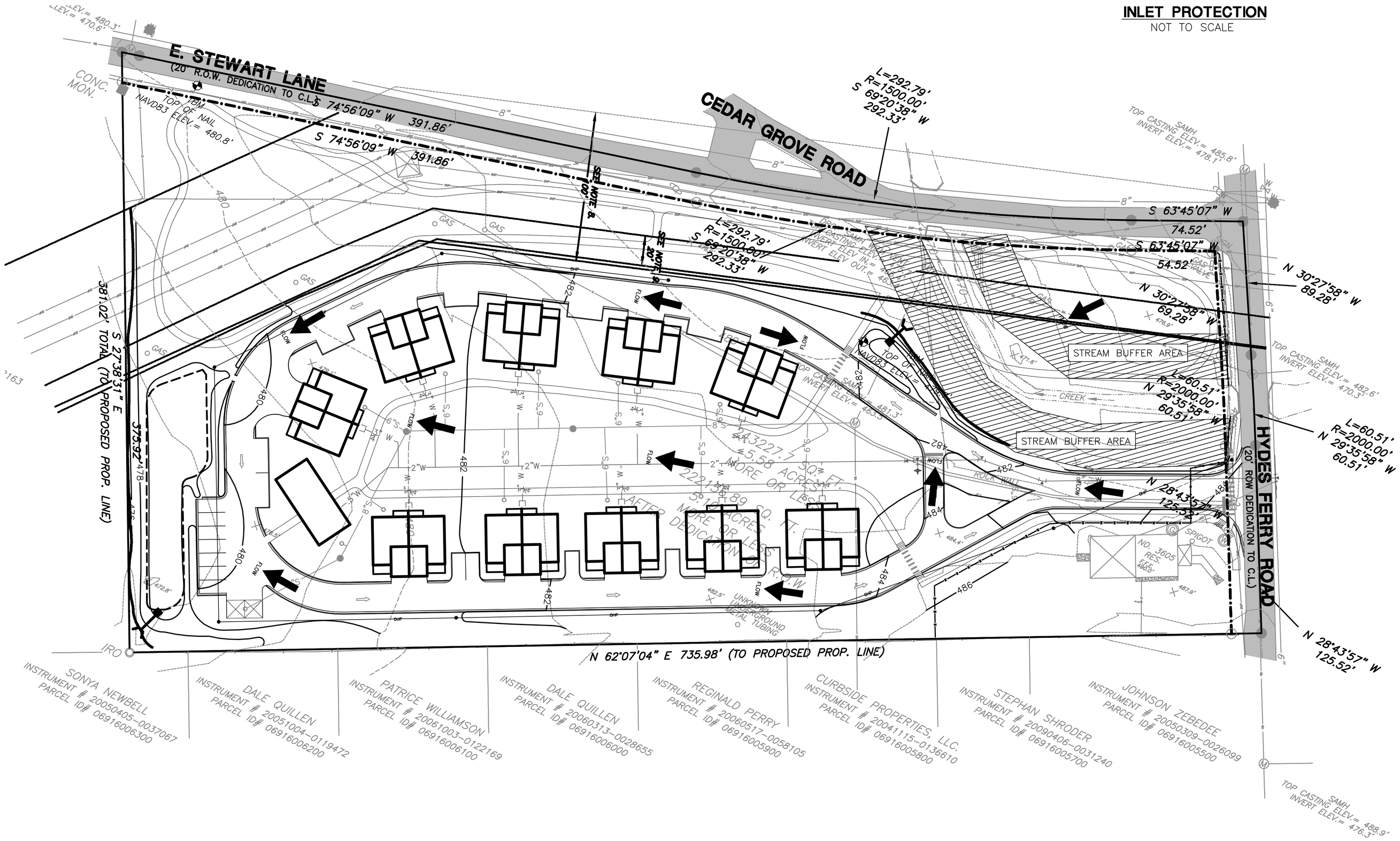

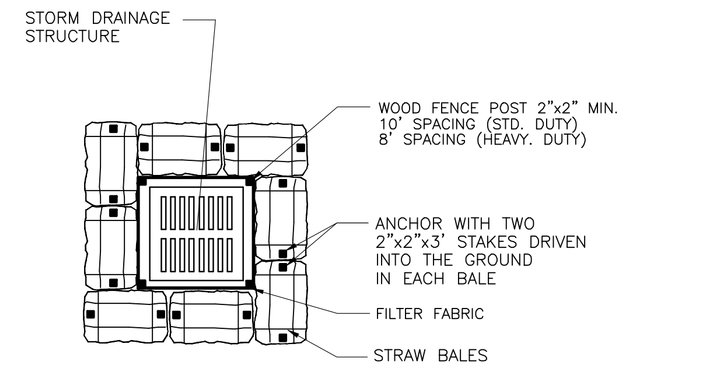

INLET PROTECTION
NOT TO SCALE

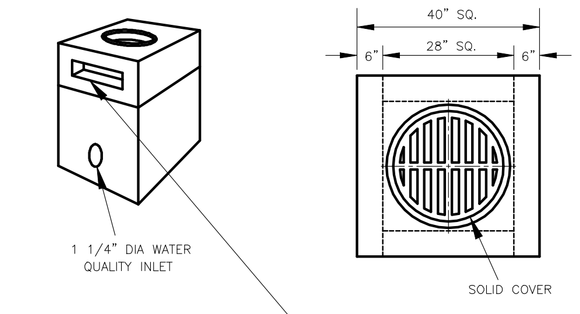

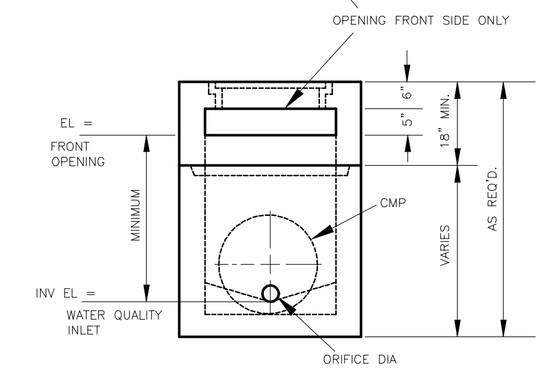

MINIMUM DIMENSION FOR RCP
15" – 2.33'

CONCRETE: 4500 PSI @ 28 DAYS
REINFORCING: #4 BAR GR. 60

OUTLET CONTROL STRUCTURE
NOT TO SCALE

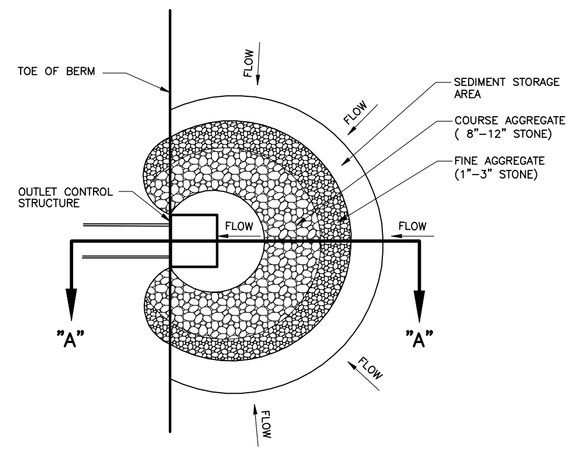

PLAN

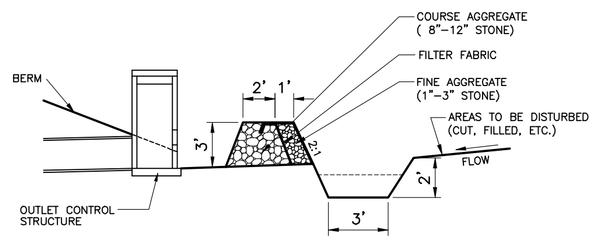

SECTION A–A

OUTLET CONTROL STRUCTURE SEDIMENT TRAP
NOT TO SCALE

EROSION CONTROL SCHEDULE:

STAGE #1: SILT FENCE SHALL BE INSTALLED PRIOR TO ANY GRADING OPERATIONS. STRAW CHECK DAMS AND INLET PROTECTION AROUND ALL EXISTING DRAINAGE STRUCTURES SHALL BE INSTALLED PRIOR TO ANY GRADING OPERATIONS. TREE PROTECTION, IF REQUIRED BY LANDSCAPE PLAN, IS TO BE INSTALLED AT THIS TIME. A GRADING PERMIT CAN BE OBTAINED FROM COUNTY STORMWATER DEPARTMENT AFTER STAGE #1 HAS PASSED THEIR INSPECTION.

STAGE #2: CONSTRUCT SITE IMPROVEMENTS PROVIDING INLET PROTECTION AND ALL OTHER EROSION CONTROL MEASURES AS THE DRAINAGE SYSTEM IS CONSTRUCTED.

STAGE #3: REMOVE EROSION CONTROL DEVICES ONLY UPON APPROVAL FROM THE ENGINEER.

STORMWATER NOTES:

1: ANY EXCAVATION, FILL OR DISTURBANCE OF THE EXISTING GROUND ELEVATION MUST BE DONE IN ACCORDANCE WITH STORM WATER MANAGEMENT ORDINANCE NO. 78–840 AND APPROVED BY THE METROPOLITAN DEPT. OF WATER SERVICES.

2: THIS DRAWING IS FOR ILLUSTRATION PURPOSES TO INDICATE THE BASIC PREMISE OF THE DEVELOPMENT. THE FINAL LOT COUNT AND DETAILS OF THE PLAN SHALL BE GOVERNED BY THE APPROPRIATE REGULATIONS AT THE TIME OF FINAL APPLICATION.

3: THE BUFFER ALONG WATERWAYS WILL BE AN AREA WHERE THE SURFACE IS LEFT IN A NATURAL STATE, AND IS NOT DISTURBED BY CONSTRUCTION ACTIVITY. THIS IS IN ACCORDANCE WITH THE STORMWATER MANAGEMENT MANUAL VOLUME 1 – REGULATIONS.)

4: METRO WATER SERVICES SHALL BE PROVIDED SUFFICIENT AND UNENCUMBERED ACCESS IN ORDER TO MAINTAIN AND REPAIR UTILITIES IN THIS SITE.

5: SIZE DRIVEWAY CULVERTS PER THE DESIGN CRITERIA SET FORTH BY THE METRO STORMWATER MANAGEMENT MANUAL (MINIMUM DRIVEWAY CULVERT IN METRO ROW IS 15" CMP).

SIDEWALK CROSSING NOTE

SIDEWALKS ARE REQUIRED TO CROSS THE EXISTING BLUE LINE STREAM ALONG HYDE'S FERRY ROAD. CONSTRUCTION DETAILS SHALL BE SUBMITTED WITH THE FINAL SITE PLAN.

IF YOU DIG TENNESSEE...
CALL US FIRST!
1–800–351–1111
1–615–366–1987
TENNESSEE ONE CALL
IT'S THE LAW

0 40 80 120

CIVIL DESIGN CONSULTANTS, LLC
CIVIL ENGINEERS • LAND PLANNERS
THE BELLEVUE CENTER, SUITE 205
7875 CEDAR BEND DRIVE, NASHVILLE, TN. 37221
PHONE: (615) 319–4781 FAX: (615) 319–4783 EMAIL: CDCNASHVILLE@BELLSOUTH.NET

JARED R. GRAY
LICENSED PROFESSIONAL ENGINEER
No. 108403
STATE OF TENNESSEE

KELLY DRIVER SR. RETIREMENT

DEVELOPMENT PLAN – 3605 HYDES FERRY PIKE
2nd COUNCIL DISTRICT
METRO NASHVILLE, DAVIDSON COUNTY TENNESSEE

STORMWATER BMP PLAN

2	10–30–09 (JRG) Rev. Per City Comments.
1	08–18–09 (JRG) Rev. Per City Comments.
REVISIONS	
DESIGNED BY:	J. GRAY
DRAWN BY:	J. GRAY
APPROVED BY:	J. GRAY
SCALE:	1"=40'
DATE:	July 10, 2009
JOB NO.	WK. ORDER
09-005	001
SHEET NO.	05 of 06

UTILITY NOTES:
ALL PUBLIC INFRASTRUCTURE IMPROVEMENTS WILL INCLUDE DEDICATION OF PROPER EASEMENTS UPON COMPLETION OF FINAL CONSTRUCTION DOCUMENTS.

ALL CIVIL DUCT AND GEAR PAD LOCATIONS WILL BE DETERMINED PRIOR TO FINAL APPROVAL OF THE CONSTRUCTION DOCUMENTS BASED UPON AN APPROVED NES LAYOUT.

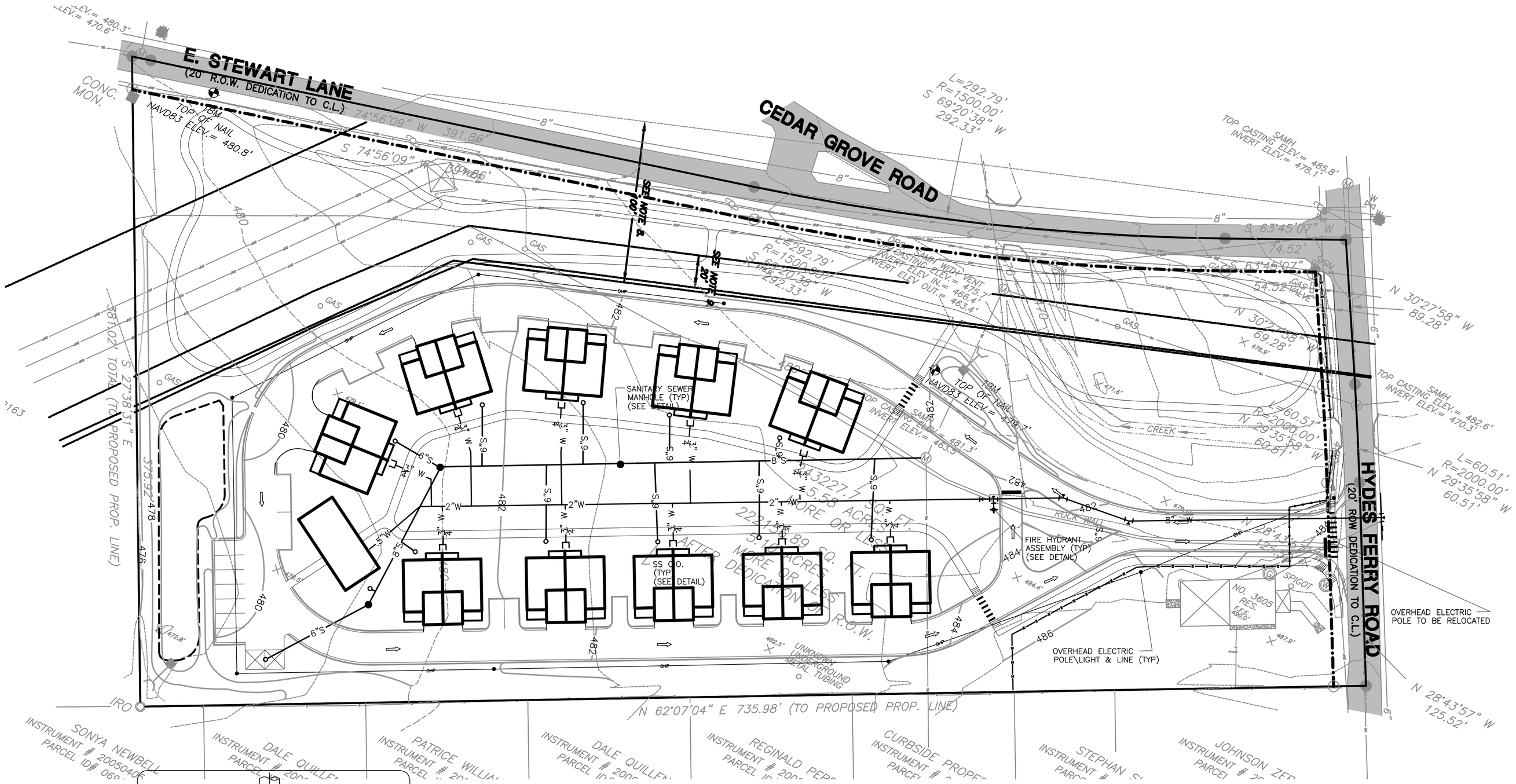

GENERAL UTILITY NOTES- NASHVILLE:

1. WHERE SEWER LINES PASS OVER OR WITHIN 2.5 FEET OF WATER MAINS, THE SEWER SHALL BE ENCASED IN CONCRETE.
2. ALL PAVED AREAS SHALL BE CONSTRUCTED TO SUBGRADE, AND ALL PROPOSED FILLS SHALL BE MADE AND COMPACTED PRIOR TO CONSTRUCTION OF SANITARY SEWERS.
3. CONTRACTOR IS RESPONSIBLE FOR ALL HORIZONTAL AND VERTICAL BENDS, JOINTS, AND FITTINGS TO CONSTRUCT UTILITIES.
4. CONTRACTOR IS RESPONSIBLE FOR ANY COSTS/FEES ASSOCIATED WITH CONSTRUCTION SHOWN ON DRAWINGS.
5. CONTRACTOR SHALL VERIFY LOCATIONS OF ALL EXISTING UTILITIES, INCLUDING SEWERS, PRIOR TO CONSTRUCTION.
6. ALL CONNECTIONS TO EXISTING MANHOLE(S) SHALL BE CORING AND RESILIENT CONNECTOR METHOD.
7. A MINIMUM OF 3' GROUND COVER SHALL BE MAINTAINED OVER ALL PROPOSED SANITARY SEWER LINES.
8. SEE MECHANICAL DRAWINGS FOR EXACT LOCATIONS OF SEWER CONNECTIONS, WATER CONNECTIONS, AND GAS CONNECTIONS.
9. ALL SANITARY SEWER UTILITY INSTALLATION SHALL BE IN ACCORDANCE WITH SPECIFICATIONS OF THE METROPOLITAN DEPARTMENT OF WATER AND SEWERAGE SERVICES.
10. ALL WATER UTILITY INSTALLATION SHALL BE IN ACCORDANCE WITH SPECIFICATIONS OF THE METROPOLITAN DEPARTMENT OF WATER AND SEWERAGE SERVICES.
11. THE CONTRACTOR IS RESPONSIBLE FOR REIMBURSING THE METROPOLITAN DEPARTMENT OF WATER AND SEWERAGE SERVICES AND THE COST OF INSPECTION.
12. SEWER PIPE TO BE SDR-35 PLASTIC PIPE.
13. THE CONTRACTOR SHALL MAINTAIN UNINTERRUPTED DOMESTIC AND FIRE WATER SERVICE UNTIL THE NEW SYSTEM HAS BEEN COMPLETED, TESTED, AND APPROVED.
14. INSPECTION CLEANOUT TO BE INSTALLED ACCORDING TO METRO WATER AND SEWER SPECIFICATIONS.
15. ALL WATER METERS SHALL BE NO DEEPER THAN 24" FROM THE TOP OF THE METER TO PROPOSED GRADE.
16. THE CONTRACTOR IS REQUIRED TO PREPARE FOR INSTALLATION OF GAS APPURTENANCES INCLUDING, BUT NOT LIMITED TO, GRADING, TRENCHING, ETC. NASHVILLE GAS TO PROVIDE AND INSTALL APPURTENANCES AND LINE. CONTRACTOR TO BACKFILL TRENCH IN ACCORDANCE TO NASHVILLE GAS SPECIFICATIONS. CONTRACTOR SHALL PAY FOR ALL COSTS ASSOCIATED WITH INSTALLATION OF GAS LINES AND APPURTENANCES.
17. ALL NEW MANHOLE(S) TO HAVE A 24" CLEAR OPENING.
18. A MINIMUM COVER OF 24" SHALL BE MAINTAINED OVER ALL WATER LINES.
19. CONTRACTOR SHALL CONSTRUCT TOP OF CASTINGS OF MANHOLES AND TOP OF CLEANOUTS FLUSH WITH FINAL GRADES.
20. UNDERGROUND WATER MAINS AND HYDRANTS MUST BE INSTALLED AND IN SERVICE PRIOR TO ALL OTHER CONSTRUCTION WORK.
21. ALL FIRE PROTECTION LINES SHALL BE DUCTILE IRON.
22. APPROPRIATE THRUST BLOCKING SHALL BE INSTALLED PER METRO NASHVILLE\DAVIDSON COUNTY SPECIFICATIONS

SIDEWALK CROSSING NOTE

SIDEWALKS ARE REQUIRED TO CROSS THE EXISTING BLUE LINE STREAM ALONG HYDE'S FERRY ROAD. CONSTRUCTION DETAILS SHALL BE SUBMITTED WITH THE FINAL SITE PLAN.

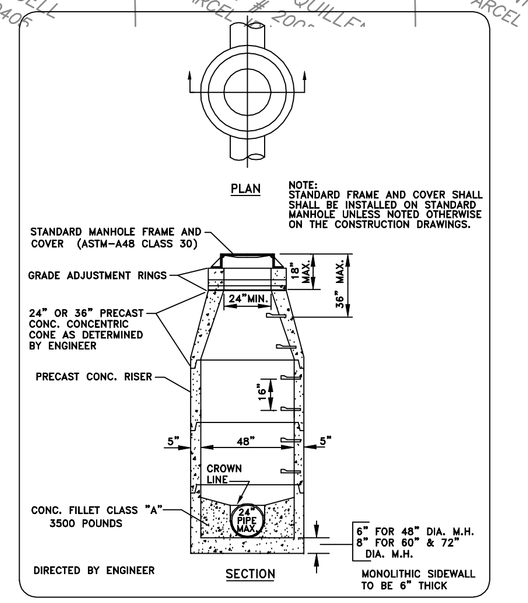

METROPOLITAN GOVERNMENT OF NASHVILLE AND DAVIDSON COUNTY DEPARTMENT OF WATER AND SEWERAGE SERVICES		STD. PRECAST CONC. MANHOLE DETAIL
NOT TO SCALE	DATE: 8/20/02	DWG. NO. SDET003

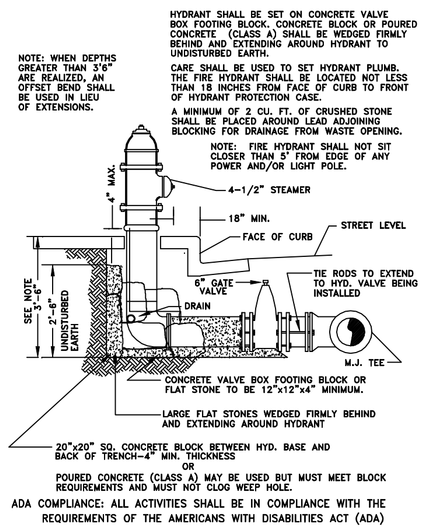

METRO FIRE HYDRANT ASSEMBLY (COMPLETE)

NOT TO SCALE

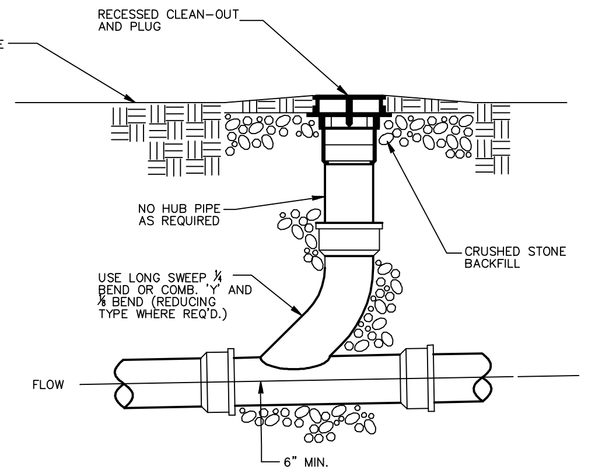

CLEAN OUT (TYP)

NOT TO SCALE

IF YOU DIG TENNESSEE...
CALL US FIRST!
1-800-351-1111
1-615-366-1987
TENNESSEE ONE CALL
IT'S THE LAW

0 40 80 120

CIVIL DESIGN CONSULTANTS, LLC
CIVIL ENGINEERS • LAND PLANNERS
THE ELLIOTT BUILDING
3875 OLD HWY 96 N., SUITE 101, FRANKLIN, TN 37221
(615) 319-4781 FAX (615) 794-4846

JARED R. GRAY
REGISTERED ENGINEER
No. 108403
STATE OF TENNESSEE

KELLY DRIVER SR. RETIREMENT

DEVELOPMENT PLAN – 3605 HYDES FERRY PIKE

2nd COUNCIL DISTRICT

METRO NASHVILLE, DAVIDSON COUNTY TENNESSEE

UTILITY PLAN

REVISIONS
2 10-30-09 (JRG) Rev. Per City Comments.
1 08-18-09 (JRG) Rev. Per City Comments.

DESIGNED BY:	J. GRAY
DRAWN BY:	J. GRAY
APPROVED BY:	J. GRAY
SCALE:	1"=40'
DATE:	July 10, 2009
JOB NO.	WK. ORDER
09-005	001

SHEET NO.
06 of 06