PRELIMINARY SP PLAN FOR

NASHVILLE BALLET

MAP 104-01, PARCELS 140.02, 104010A00100CO, 104010A00200CO 104010A00300CO, 104010A00400CO 104010A00500CO AND 10401043400

NASHVILLE, TENNESSEE

JANUARY 2, 2014

DEVELOPMENT SUMMARY		
COUNCIL DISTRICT/COUNCILMAN	24/ JASON HOLLEMAN	
OWNER(S) RECORD / PARCEL #	O.I.C. REDMON STREET CONDOMINIUM	500-CO
	NASHVILLE BALLET	100-CO,200-CO,140.02
	NASHVILLE OPERA ASSOCIATION	400-CO
	WILLIAM F. HUNT	300-CO
	METRO GOVERNMENT BACK TAX SALE	10401043400
SP NAME	NASHVILLE BALLET	
SP NUMBER	2014SP-011-001	
PLAN PREPARATION DATE	JANUARY 2, 2014	
DESIGN PROFESSIONAL	CURTIS P. INGRAM JR. TN LICENSE NO. 104476	
U.S. FEMA FIRM MAP NO.	47037CO214 F / ZONE "X" /NOT IN SPECIAL FLOOD AREA/ DATED: APRIL 20, 2001	

PARKING TABLE	
REQUIRED PARKING EXISTING: REQUIRED PARKING PROPOSED (COMMERCIAL AMUSEMENT INDOOR) (GENERAL OFFICE) 1 SPACE PER 200 SQ. FT. :1 PER 55,613 / 200=279 1 SPACE PER 500 SQ. FT. :1 PER 8,996 / 500=17, UZO REDUCTION OF 2,000 SQ. FT. = 1 SPACE PER 500 SQ. FT. :1 PER 6,996 / 500=14	293 SPACES
EXISTING PARKING	
STANDARD	188
ACCESSIBLE	4
TOTAL	192
REQUIRED PARKING PROPOSED (COMMERCIAL AMUSEMENT INDOOR) (FUTURE RETAIL) 1 SPACE PER 200 SQ. FT. :1 PER 57,484 / 200=288, 1 SPACE PER 200 SQ. FT. :1 PER 8,996 / 200=45, UZO REDUCTION OF 2,000 SQ. FT. = 1 SPACE PER 500 SQ. FT. :1 PER 6,996 / 200=35	323 SPACES
PROPOSED PARKING	
STANDARD	178
ACCESSIBLE	9
TOTAL	187

* EXISITING PARKING AVAILABLE ON SITE DOES NOT MEET THE CURRENT PARKING REQUIREMENT FOR THE EXISITING USES.

** SEE ALSO REDMON STREET CONDOMINIUM PARKING STUDY PERFORMED BY RPM TRANSPORTATION SONSULTANTS ON FEB. 25, 2011.

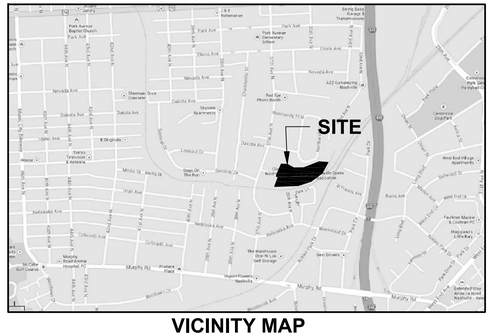

VICINITY MAP
SCALE:NTS

SHEET INDEX

COVER
SURVEY
C100 DEMOLITION PLAN
C200 SITE PLAN
C210 SITE DETAILS
C220 SITE DETAILS
C230 SITE DETAILS
C300 GRADING PLAN
C301 ACCESSIBILITY PLAN
C400 PRE-DEVELOPMENT DRAINAGE MAP
C401 POST-DEVELOPMENT DRAINAGE MAP
C402 DRAINAGE PLAN
C403 WATER QUALITY DRAINAGE MAP
C410 DRAINAGE DETAILS
C420 DRAINAGE DETAILS
C500 PRE-DEVELOPMENT STORM WATER POLLUTION PREVENTION PLAN
C501 STORM WATER POLLUTION PREVENTION PLAN
C510 SWPPP DETAILS
C600 UTILITY PLAN
C610 UTILITY DETAILS
L1.01 LANDSCAPE PLAN
L1.02 LANDSCAPE DETAILS

NOTE:
COMMON AREAS WILL BE MAINTAINED ACCORDING TO THE CONDOMINIUM ASSOCIATION BYLAWS. MASTER DEED INST. NO. 20010126-0008124

PURPOSE NOTE:
THE PURPOSE OF THIS SP IS TO PERMIT EXISTING USES INCLUDING THE NASHVILLE BALLET, NASHVILLE OPERA AND A SMALL WAREHOUSE AND PERMIT THE EXPANSION OF THOSE USES AND AN EXISTING BUILDING. THIS SP ALSO PROPOSES THE EXPANSION OF THE EXISTING PARKING LOT INTO THE ADJACENT PARCEL # 140.02. PARCEL 10401043400 WILL ALSO BE INCLUDED AS PART OF THE NASHVILLE BALLET SP.

FOR ANY DEVELOPMENT STANDARDS, REGULATIONS AND REQUIREMENTS NOT SPECIFICALLY SHOWN ON THE SP PLAN AND/OR INCLUDED AS A CONDITION OF COMMISSION OR COUNCIL APPROVAL, THE PROPERTY SHALL BE SUBJECT TO THE STANDARDS, REGULATIONS AND REQUIREMENTS OF THE MUL ZONING DISTRICT AS OF THE DATE OF THE APPLICABLE REQUEST OR APPLICATION.

LANDSCAPING STANDARDS NOTE:
LANDSCAPING SHALL BE PROVIDED IN ACCORDANCE WITH THE APPROVED PLAN. DENSE LANDSCAPING SHALL SEPARATE THE PROPOSED/EXISTING PARKING AREAS FROM ABUTTING RESIDENTIAL ZONED PROPERTIES. FOR AREAS NOT SHOWN ON THE LANDSCAPE PLAN THE ZONING ORDINANCE SHALL APPLY.

SIGNAGE STANDARDS NOTE:
EXCEPT FOR THE EXISTING OPERA SIGN AS SHOWN ON THE SITE PLAN AND SMALL DIRECTIONAL SIGNS, GROUND SIGNS SHALL NOT BE PERMITTED. NO MORE THAN ONE BUILDING SIGN SHALL BE PERMITTED ON THE WEST FACADE OF THE BUILDING. NO SIGNAGE SHALL BE PERMITTED ON THE NORTH FACADE.

BUILDING SIGN IS TO BE NO LARGER THAN 160 SQ. FT. OF DISPLAY AREA AND SHALL BE FLAT MOUNTED.

SIGNS SHALL NOT BE INTERNALLY ILLUMINATED. DIGITAL SIGNS ARE PROHIBITED.

SITE DATA TABLE		
GROSS SITE HORIZONTAL AREA	4.72 ACRES	
MAXIMUM FLOOR AREA RATIO (FAR)	.33	
LOTS	3 EXISTING 1 PROPOSED	
SETBACKS		
EXISTING		
FRONT	50 FEET	
SIDE	0 FEET	
REAR	20 FEET	
PROPOSED (NEW BUILDINGS - MINIMUM)		
FRONT (WEST)	40 FEET	
SIDE (NORTH, SOUTH)	20 FEET	
REAR (EAST)	20 FEET	
MAXIMUM BUILDING HEIGHT	2 STORIES (MAX HEIGHT 33')	
IMPERVIOUS SURFACE RATIO (ISR)		
(MAX ISR)	0.9	
TOTAL PROSOSED	.75	
EXISTING LAND USE SQ. FT.		
COMMERCIAL AMUSEMENT	55,613	
-REHEARSAL HALL	-	
-PERSONAL INSTRUCTION	-	
GENERAL OFFICE	8,996	
OPEN/COMMON SPACE	140,994	
PROPOSED LAND USE SQ. FT.		
COMMERCIAL AMUSEMENT	57,484	
-REHEARSAL HALL	-	
-PERSONAL INSTRUCTION	-	
RETAIL (GENERAL OFFICE)	8,996	
OPEN/COMMON SPACE	139,123	
USES	REHEARSAL HALL	WAREHOUSE
EXISTING	PERSONAL INSTRUCTION	VACANT RESIDENTIAL LAND
	COMMERCIAL AMUSEMENT (INSIDE)	CUSTOM ASSEMBLY
	GENERAL OFFICE	RETAIL
	OPEN/COMMON SPACE	
PROPOSED	REHEARSAL HALL	WAREHOUSE
	PERSONAL INSTRUCTION	CUSTOM ASSEMBLY
	COMMERCIAL AMUSEMENT (INSIDE)	RETAIL
	GENERAL OFFICE	
	OPEN/COMMON SPACE	
ZONING		
EXISTING	IWD, RS5	
PROPOSED	SP	

INGRAM CIVIL ENGINEERING GROUP, LLC
240 WILSON PIKE CIRCLE, SUITE 200
BRENTWOOD, TN 37027
615.370.7964 OFFICE
615.370.1273 FAX

CURTIS P. INGRAM JR. REGISTERED ENGINEER AGRICULTURE COMMERCE No. 104476 STATE OF TENNESSEE 2-4-14

CASE NO.: 2014SP-011-001

CURVE TABLE						
CURVE	RADIUS	ARC LENGTH	CHORD LENGTH	CHORD BEARING	DELTA ANGLE	TANGENT
C1	1083.30'	400.01'	397.66'	N 75°17'10" E	21°33'17"	202.40'
C2	1105.43'	833.71'	814.09'	S 73°51'26" W	43°12'44"	437.81'

LINE TABLE		
LINE	BEARING	DISTANCE
L1	N 70°37'54" W	48.14'
L2	N 71°11'17" W	50.00'
L3	S 70°29'49" E	49.74'
L4	S 70°49'23" E	56.48'
L5	S 69°29'53" E	91.64'
L6	N 40°06'29" E	44.00'
L7	S 70°10'49" E	67.56'
L8	S 57°42'18" E	30.80'
L9	S 22°06'22" W	35.67'
L10	S 70°24'38" E	87.89'
L11	N 18°37'28" E	49.53'

LEGEND

- FOUND PIN OR PIPE IP(O)
- SET IRON PIN IP(N)
- FOUND MONUMENT MON(O)
- SET MONUMENT MON(N)
- PROPERTY LINE
- YARD LINE
- EASEMENT LINE
- SANITARY SEWER MANHOLE
- WATER VALVE
- FIRE HYDRANT
- LIGHT POLE
- POWER POLE
- GUY WIRE
- [XXX] STREET ADDRESS

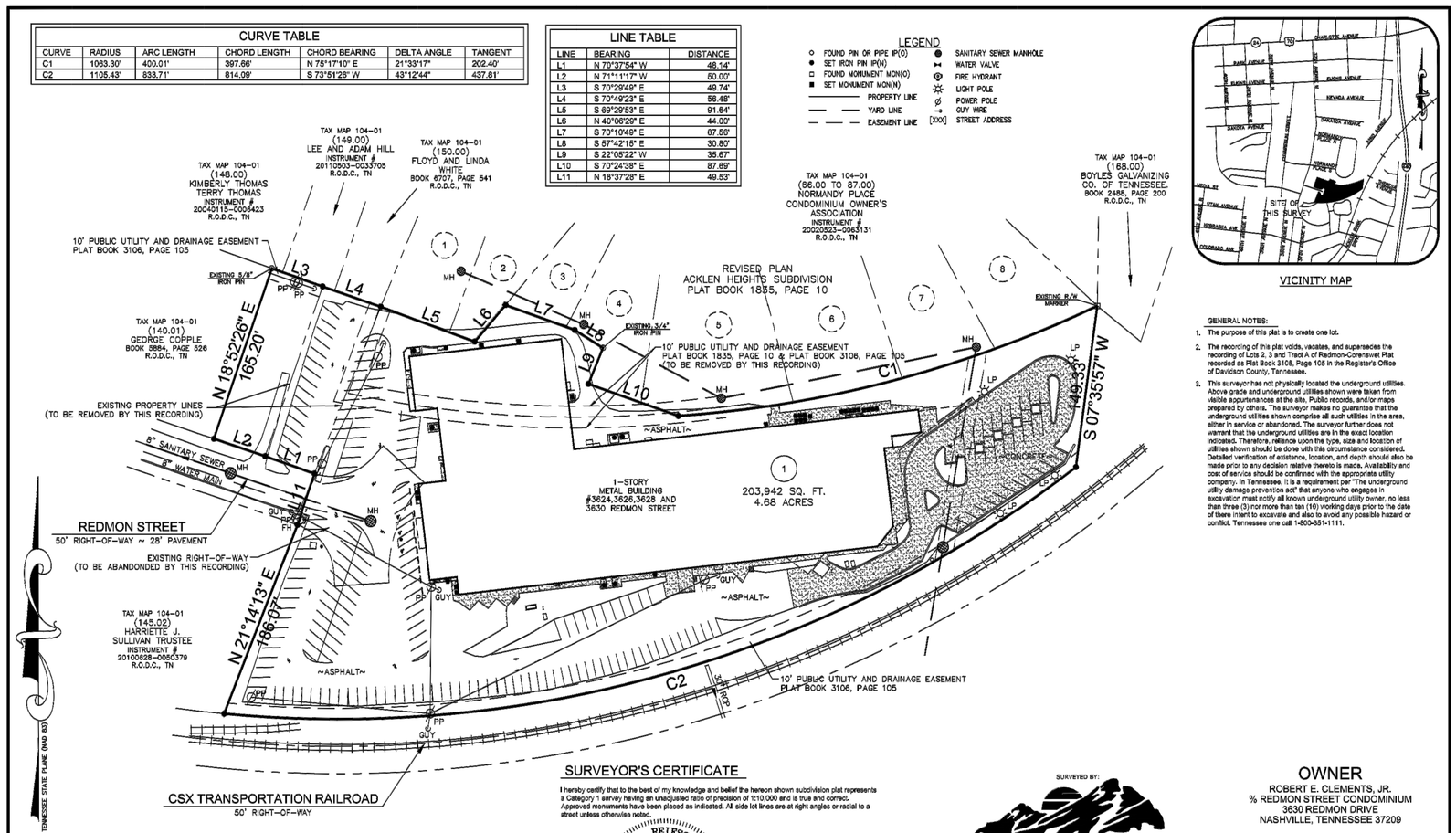

VICINITY MAP

GENERAL NOTES:

1. The purpose of this plat is to create one lot.
2. The recording of this plat voids, vacates, and supersedes the recording of Lots 2, 3 and Tract A of Redmon-Corenswet Plat recorded as Plat Book 3108, Page 105 in the Register's Office of Davidson County, Tennessee.
3. This surveyor has not physically located the underground utilities. Above grade and underground utilities shown were taken from visible appurtenances at the site, Public records, and/or maps prepared by others. The surveyor makes no guarantee that the underground utilities shown comprise all such utilities in the area, either in service or abandoned. The surveyor further does not warrant that the underground utilities are in the exact location indicated. Therefore, reliance upon the type, size and location of utilities shown should be done with this circumstance considered. Detailed verification of existence, location, and depth should also be made prior to any decision relative thereto is made. Availability and cost of service should be confirmed with the appropriate utility company. In Tennessee, it is a requirement per "The underground utility damage prevention act" that anyone who engages in excavation must notify all known underground utility owner, no less than three (3) nor more than ten (10) working days prior to the date of there intent to excavate and also to avoid any possible hazard or conflict. Tennessee one call 1-800-351-1111.

OWNER'S CERTIFICATE

I (We) hereby certify that I am (We are) the owner(s) of the property shown hereon as evidenced Instrument #20010126-0008126 R.O.D.C., Tennessee and adopt the plan of subdivision of the property shown hereon and dedicate all public ways and easements as noted. No lot or lots as shown hereon shall again be subdivided, resubdividedm altered, or changed so as to produce less area than hereby established until otherwise approved by the Metropolitan Planning Commission and under no condition shall such lot or lots be made to produce less area than prescribed by the restrictive concenants as of record in N/A , R.O.D.C., Tennessee, with the title to the property.

By: _____ Date: _____

ROBERT E. CLEMENTS, JR.

COMMISSION'S APPROVAL

Approved by the Metropolitan Planning Commission of Nashville and Davidson County, Tennessee.

Name: _____ Date: _____

SURVEYOR'S CERTIFICATE

I hereby certify that to the best of my knowledge and belief the hereon shown subdivision plat represents a Category 1 survey having an unadjusted ratio of precision of 1:10,000 and is true and correct. Approved monuments have been placed as indicated. All side lot lines are at right angles or radial to a street unless otherwise noted.

Name: _____ Date: _____

BRIAN M. REIFSCHNEIDER R.L.S., TN # 2487

RECORD

SUBDIVISION No. 2013S-XXX-001

GRAPHIC SCALE

0' 60' 120' 180'

SCALE: 1" = 60'

SURVEYED BY:

BLUE RIDGE SURVEYING, INC.

114B WEST MAIN STREET, P.O. BOX 8072 GALLATIN, TENNESSEE 37066

OFFICE (615) 451-8739 CELL (615) 428-4449

BLUERIDGESURVEYING@YAHOO.COM

OWNER

ROBERT E. CLEMENTS, JR.
% REDMON STREET CONDOMINIUM
3630 REDMON DRIVE
NASHVILLE, TENNESSEE 37209

DEVELOPER

NASHVILLE BALLET, INC.
3630 REDMON DRIVE
NASHVILLE, TENNESSEE 37209

RESUBDIVISION OF LOTS 2, 3 AND TRACT "A" OF THE REDMON-CORENSWET PLAT

24TH COUNCILMANIC DISTRICT
3624, 3626, 3628 and 3630 REDMON STREET
NASHVILLE, DAVIDSON COUNTY, TENNESSEE

DATE OF SURVEY: FEBRUARY 11, 2013
DATE OF DRAWING: DECEMBER 26, 2013

SHEET 1 OF 1

NOTE:
COMMON AREAS WILL BE MAINTAINED
ACCORDING TO THE CONDOMINIUM ASSOCIATION BYLAWS.
MASTER DEED INST. NO. 20010126-0008124

GENERAL DEMOLITION NOTES

1. THE SITE WORK FOR THIS PROJECT SHALL MEET OR EXCEED THE CITY OF NASHVILLE/DAVIDSON COUNTY STANDARD SITE WORK SPECIFICATIONS.

2. CONTRACTOR SHALL BE RESPONSIBLE FOR REMOVAL OF THE EXISTING STRUCTURES, RELATED UTILITIES, PAVING, UNDERGROUND STORAGE TANKS AND ANY OTHER EXISTING IMPROVEMENTS, AS NOTED. SEE SITE WORK SPECIFICATIONS.

3. CONTRACTOR IS TO REMOVE AND DISPOSE OF ALL DEBRIS, RUBBISH AND OTHER MATERIALS RESULTING FROM PREVIOUS AND CURRENT DEMOLITION OPERATIONS. DISPOSAL WILL BE IN ACCORDANCE WITH ALL LOCAL, STATE AND/OR FEDERAL REGULATIONS GOVERNING SUCH OPERATIONS.

4. THE GENERAL CONTRACTOR SHALL TAKE ALL PRECAUTIONS NECESSARY TO AVOID PROPERTY DAMAGE TO ADJACENT PROPERTIES DURING THE CONSTRUCTION PHASES OF THIS PROJECT. THE CONTRACTOR WILL BE HELD SOLELY RESPONSIBLE FOR ANY DAMAGES TO THE ADJACENT PROPERTIES OCCURRING DURING THE CONSTRUCTION PHASES OF THIS PROJECT.

5. ENGINEER'S NOTICE TO CONTRACTOR: THE CONTRACTOR IS SPECIFICALLY CAUTIONED THAT THE LOCATION AND/OR ELEVATION OF EXISTING UTILITIES AS SHOWN ON THESE PLANS IS BASED ON RECORDS OF THE VARIOUS UTILITY COMPANIES AND, WHERE POSSIBLE, MEASUREMENTS TAKEN IN THE FIELD. THE INFORMATION IS NOT TO BE RELIED ON AS BEING EXACT OR COMPLETE. THE CONTRACTOR MUST CALL THE APPROPRIATE UTILITY COMPANY AT LEAST 48 HOURS BEFORE ANY EXCAVATION TO REQUEST EXACT FIELD LOCATION OF UTILITIES. IT SHALL BE THE RESPONSIBILITY OF THE CONTRACTOR TO RELOCATE ALL EXISTING UTILITIES WHICH CONFLICT WITH THE PROPOSED IMPROVEMENTS SHOWN ON THE PLANS.

6. SITE LAYOUT FOR THE NASVHILLE BALLET BY INGRAM CIVIL ENGINEERING GROUP, LLC, BASED ON SITE SURVEY BY BLUE RIDGE SURVEYING, INC. ON 3-15-13. ORIGINAL TOPOGRAPHICAL INFORMATION IS BASED ON A SURVEY BY BLUE RIDGE SURVEYING, INC. ON 3-15-13. THE ENGINEER, THE OWNER, OR ANY OF THE OWNER'S CONSULTANTS SHALL NOT BE HELD RESPONSIBLE FOR THE ACCURACY OR COMPLETENESS OF THE INFORMATION.

7. ALL NOTED DISTANCES WITH REGARD TO ITEMS TO BE DEMOLISHED ARE APPROXIMATE.

DEMOLITION NOTES

A	TO BE REMOVED
B	TO BE REMOVED. SEE ELECTRICAL FOR MORE INFORMATION.
C	ALTERNATE C-1.
D	TO BE REMOVED. SEE MECHANICAL FOR MORE INFORMATION.
E	TO BE REMOVED. ARCHITECTURAL FOR MORE INFORMATION.
F	TO BE REMOVED. PLUMBING FOR MORE INFORMATION.

LEGEND: DEMOLITION

EXISTING PAVEMENT TO BE SAWCUT & REMOVED

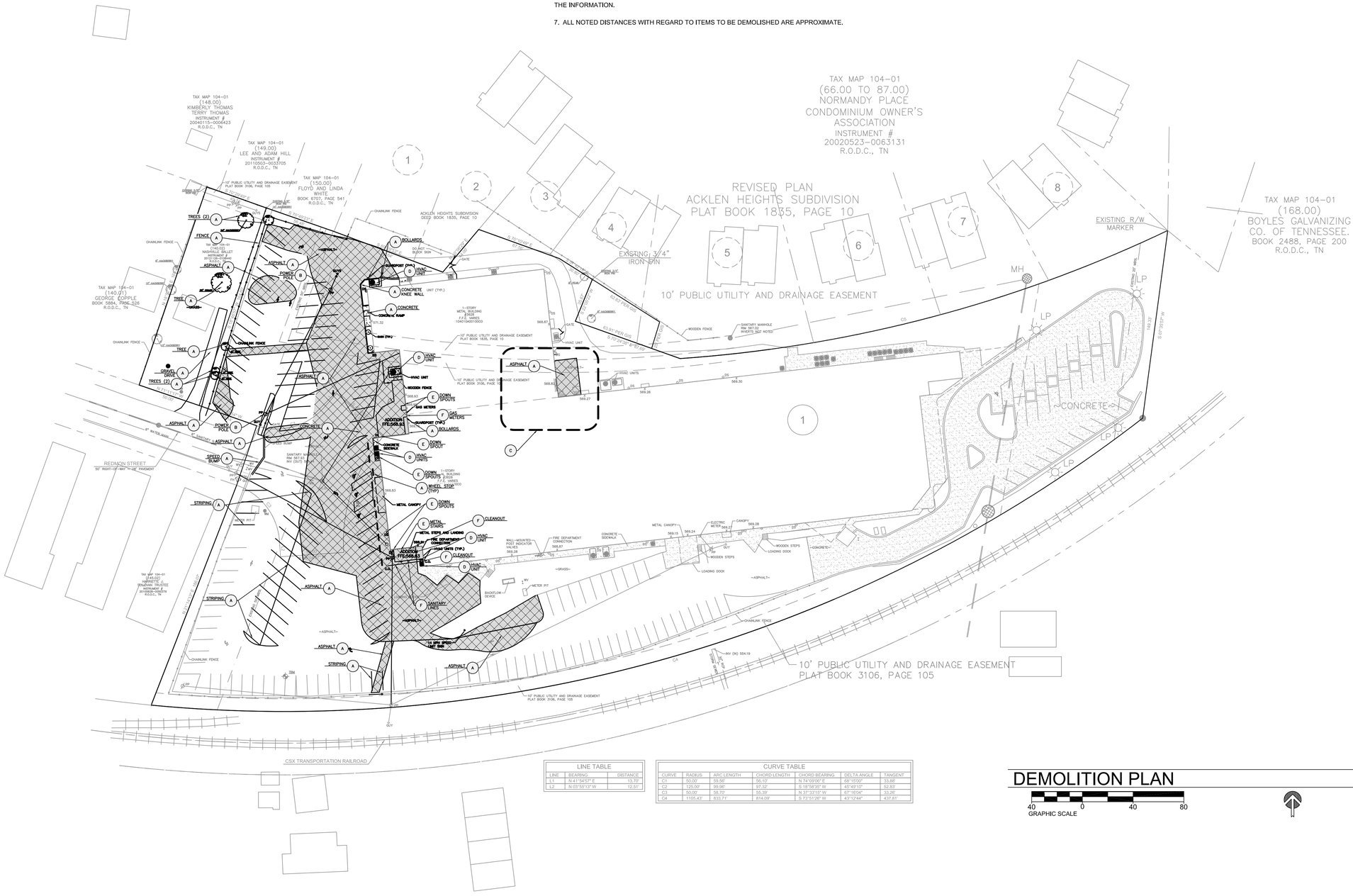

LINE TABLE

LINE	BEARING	DISTANCE
L1	N 41°54'57" E	13.70'
L2	N 03°55'13" W	12.51'

CURVE TABLE

CURVE	RADIUS	ARC LENGTH	CHORD LENGTH	CHORD BEARING	DELTA ANGLE	TANGENT
C1	50.00'	59.56'	56.10'	N 74°09'06" E	68°15'00"	33.66'
C2	125.00'	99.96'	97.32'	S 18°58'35" W	45°49'10"	52.83'
C3	50.00'	58.70'	55.39'	N 37°32'15" W	67°16'04"	33.26'
C4	1105.43'	833.71'	814.09'	S 73°51'26" W	43°12'44"	437.81'

DEMOLITION PLAN

GRAPHIC SCALE 40 0 40 80

CASE NO.: 2014SP-011-001

ICE GROUP

INGRAM CIVIL ENGINEERING, LLC
240 WILSON PIKE CIRCLE, SUITE 200
BRENTWOOD, TN 37027
615.370.7964 OFFICE
615.370.1273 FAX
TENNESSEE LICENSE No.: 104476
CURTIS P. INGRAM JR.

ESa Architects
richard l. miller, architect
2100 West End Avenue, Suite 1200
Vanderbilt Plaza
Nashville Tennessee 37203
615-329-9445

This drawing and the design shown is the property of the architect. The reproduction, copying or use of this drawing without their written consent is prohibited and any infringement will be subject to legal action.

© ESa Architects 2010

Seals

CURTIS P. INGRAM JR. REGISTERED ENGINEER AGRICULTURE ARCHITECTS ENGINEERS No. 104476 STATE OF TENNESSEE 1-21-13

AGENCY REVIEW SET

NASHVILLE BALLET EXPANSION AND RENOVATION

3630 REDMON STREET - NASHVILLE, TN

Revisions △

No.	Date	Description

Issue Description

Issue Date	1-21-2013
Project No	P1200.24
Drawn By Author	Checked By Checker

Drawing Title

DEMOLITION PLAN

Sheet Number

C100

NOTE:
COMMON AREAS WILL BE MAINTAINED
ACCORDING TO THE CONDOMINIUM ASSOCIATION BYLAWS.
MASTER DEED INST. NO. 20010126-0008124

PURPOSE NOTE:
THE PURPOSE OF THIS SP IS TO PERMIT EXISTING USES INCLUDING THE NASHVILLE BALLET, NASHVILLE OPERA AND A SMALL WAREHOUSE AND PERMIT THE EXPANSION OF THOSE USES AND AN EXISTING BUILDING. THIS SP ALSO PROPOSES THE EXPANSION OF THE EXISTING PARKING LOT INTO THE ADJACENT PARCEL # 140.02. PARCEL 10401043400 WILL ALSO BE INCLUDED AS PART OF THE NASHVILLE BALLET SP.

GENERAL SITE NOTES

1. THE NASHVILLE BALLET HAS ACQUIRED AN ADJACENT PARCEL PREVIOUSLY KNOWN AS CLIMB NASHVILLE. THE NASHVILLE BALLET IS PROPOSING AN "SP" USE THAT WILL ALLOW FOR EXPANSION OF THE NASHVILLE BALLET USE AND SITE.

2. ALL DEVELOPMENT WITHIN THE BOUNDARIES OF THIS PLAN MEETS THE REQUIREMENTS OF THE AMERICANS WITH DISABILITIES ACT AND THE FAIR HOUSING ACT.

3. SITE LAYOUT FOR THE NASHVILLE BALLET BY INGRAM CIVIL ENGINEERING GROUP, LLC, BASED ON SITE SURVEY BY BLUE RIDGE SURVEYING, INC. ON 3-15-13.

4. ORIGINAL TOPOGRAPHICAL INFORMATION IS BASED ON A SURVEY BY BLUE RIDGE SURVEYING, INC. ON 3-15-13. THE ENGINEER, THE OWNER, OR ANY OF THE OWNER'S CONSULTANTS SHALL NOT BE HELD RESPONSIBLE FOR THE ACCURACY OR COMPLETENESS OF THE INFORMATION.

5. ALL CIVIL/SITE WORK ELEMENTS INDICATED TO BE CONSTRUCTED ON THE PLANS ARE TO BE BUILT IN STRICT ACCORDANCE WITH THE STANDARDS ADOPTED BY DAVIDSON COUNTY, UNLESS SPECIFICALLY NOTED OTHERWISE. ALL SITE WORK MUST ALSO COMPLY WITH THE DAVIDSON COUNTY ENVIRONMENTAL REQUIREMENTS AND FEDERAL EPA REQUIREMENTS.

6. WRITTEN DIMENSIONS PREVAIL. DO NOT SCALE THESE DRAWINGS. PRINTED DIMENSIONS WHICH ARE OMITTED OR IN CONFLICT SHALL BE IMMEDIATELY REPORTED TO THE ENGINEER FOR REVIEW AND RESPONSE. DIMENSIONS ARE FROM FACE OF CURB / EDGE OF PAVEMENT AND FACE OF BUILDING, UNLESS NOTED OTHERWISE.

7. DIMENSIONS LOCATING THE BUILDING IN RELATIONSHIP TO THE PROPERTY LINES HAVE BEEN PROVIDED FOR THE CONVENIENCE OF THE CONTRACTOR. WHERE POSSIBLE, COORDINATES CAN BE USED TO ESTABLISH PHYSICAL LENGTHS ALONG THE BUILDING PERIMETER. THE CONTRACTOR IS RESPONSIBLE FOR VERIFYING FROM STRUCTURAL AND ARCHITECTURAL DRAWINGS THE ACTUAL EXTENT OF THE BUILDING ON THE PROPERTY. BUILDING LAYOUT SHALL BE BASED SOLELY ON DIMENSIONAL INFORMATION PROVIDED ON STRUCTURAL AND ARCHITECTURAL DRAWINGS. DISCREPANCIES WHICH IMPACT SITE LAYOUT SHOULD BE IMMEDIATELY REPORTED TO THE ENGINEER.

8. THE CONTRACTOR SHALL BE RESPONSIBLE FOR LOCATING ALL SITE FEATURES, (BUILDINGS, ROADS, PARKING, PADS, WALKS, ETC.) AND WILL EMPLOY A LAND SURVEYOR LICENSED TO PRACTICE IN THE PROJECT'S REGION OF CONSTRUCTION TO STAKE OUT AND MAINTAIN ALL REQUIRED CONTROL POINTS THROUGHOUT THE LIFE OF THE PROJECT. THE SURVEYOR SHALL CERTIFY TO THE ENGINEER, IN WRITING, THAT THE LAYOUT IN THE FIELD SUBSTANTIALLY CONFORMS TO THE LAYOUT INDICATED ON THE CONTRACT DOCUMENTS. LAYOUT DISCREPENCIES OR CHANGES SHOULD BE SO NOTED TO THE ENGINEER.

9. THE CONTRACTOR SHALL BE HELD RESPONSIBLE FOR THE DAMAGE OR LOSS OF ANY REFERENCE POINTS, MONUMENTS, HUBS, AND STAKED LOT CORNERS DURING THE CONSTRUCTION OF THE WORK AND SHALL BEAR ANY COST ASSOCIATED WITH REPAIR.

GENERAL SITE NOTES

10. THE CONTRACTOR SHALL GIVE ALL NECESSARY NOTICES, OBTAIN ALL PERMITS, AND PAY ALL PERMIT FEES. THE CONTRACTOR SHALL CONFORM TO ALL STATE AND LOCAL CODES AND ORDINANCES AND RECEIVE APPROPRIATE APPROVALS WHERE REQUIRED PRIOR TO COMMENCEMENT OF THE WORK.

11. MATERIALS AND PROCESSES OF CONSTRUCTION ARE THE SOLE RESPONSIBILITY OF THE CONTRACTOR. WHILE THE ENGINEER HAS PROVIDED, FOR THE CONVENIENCE OF THE CONTRACTOR, DRAWINGS OUTLINING CERTAIN REQUIRED OSHA MINIMUM SAFETY PRACTICES, THE ENGINEER DOES NOT ACCEPT RESPONSIBILITY FOR THE ACCURACY OF THE INFORMATION OR FOR VERIFYING THAT SUCH MEASURES ARE IMPLEMENTED ON SITE. MAINTAINING A SAFE ENVIROMENT DURING THE PROMULGATION OF THE WORK IS THE RESPONSIBILITY OF THE CONTRACTOR. THE ENGINEER, THE OWNER AND OTHER CONSULTANTS, HAVE NO EXPERTISE, NOR ACCEPT ANY LIABILITY, IMPLIED OR OTHERWISE, FOR MATERIALS AND PROCESSES OF CONSTRUCTION.

12. THE CONTRACTOR SHALL NOT COMMENCE ANY WORK WHICH IS NOT UNDER THE CONTROL OR OWNERSHIP OF THE OWNER WITHOUT WRITTEN PERMISSION FROM THE PROPERTY'S OWNER OR CONTROLLING INTEREST. WHERE CONTROLLING INTEREST IS A LOCAL, STATE, OR FEDERAL AGENCY, THEN APPROVAL FOR CONSTRUCTION SHALL CONSTITUTE AUTHORITY TO COMMENCE WORK.

13. WHERE NOT SPECIFICALLY NOTED OTHERWISE, ALL CONCRETE FINISHES SHALL BE SLIP RESISTANT PER TECHNICAL SPECIFICATIONS.

14. THE CONTRACTOR IS RESPONSIBLE FOR USING THE ONE-CALL SYSTEM OR OTHER MEANS TO CONTACT AND VERIFY LOCATIONS OF ALL UTILITIES. THE CONTRACTOR IS FULLY RESPONSIBLE FOR REPAIRS TO DAMAGED UTILITIES.

15. THE CONTRACTOR IS TO CONTROL TRAFFIC FLOW DURING TIME OF CONSTRUCTION. ANY AND ALL TRAFFIC CONTROL IMPLEMENTED DURING THIS PROJECT SHALL CONFORM TO THE MANUAL OF UNIFORM TRAFFIC CONTROL DEVICES.

16. ALL WORK WITHIN PUBLIC RIGHT-OF-WAY MUST BE IN ACCORDANCE WITH DAVIDSON COUNTY AND TENNESSEE D.O.T. REGULATIONS.

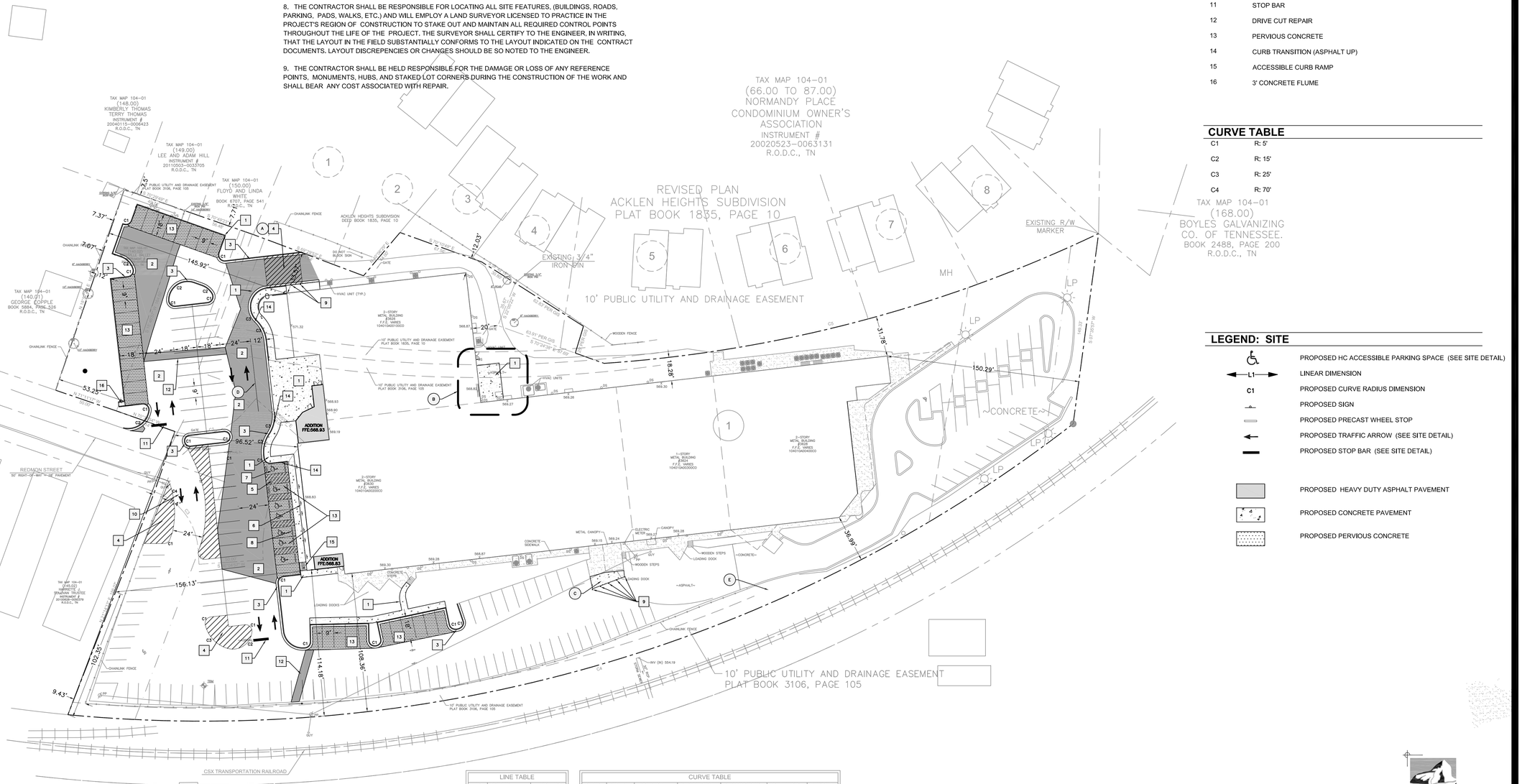

LINE TABLE

LINE	BEARING	DISTANCE
L1	N 41°54'53" E	13.70'
L2	N 01°55'13" W	12.01'

CURVE TABLE

CURVE	RADIUS	ARC LENGTH	CHORD LENGTH	CHORD BEARING	DELTA ANGLE	TANGENT
C1	55.00'	59.56'	56.10'	N 74°09'06" E	68°15'00"	33.88'
C2	125.00'	99.96'	97.32'	S 18°58'35" W	45°49'10"	52.83'
C3	50.00'	58.70'	55.39'	N 37°33'55" W	67°16'04"	33.26'
C4	1105.43'	833.71'	814.09'	S 73°57'26" W	43°12'44"	437.81'

SITE PLAN

GRAPHIC SCALE 40 0 40 80

CASE NO.: 2014SP-011-001

SITE NOTES

A	LOADING BERTH
B	ALTERNATE C-1. PATIO
C	LOADING DOCK EXPANSION
D	4" SINGLE SOLID YELLOW LINE
E	EXISTING NASHVILLE OPERA SIGN

SITE DETAILS

1	CONCRETE SIDEWALK
2	HEAVY DUTY ASPHALT
3	CONCRETE CURB AND GUTTER
4	STRIPING
5	ACCESSIBLE SPACE LAYOUT
6	ACCESSIBLE SIGNS
7	ACCESSIBLE SYMBOL
8	WHEEL STOP
9	PIPE BOLLARD
10	TRAFFIC FLOW ARROWS
11	STOP BAR
12	DRIVE CUT REPAIR
13	PERVIOUS CONCRETE
14	CURB TRANSITION (ASPHALT UP)
15	ACCESSIBLE CURB RAMP
16	3' CONCRETE FLUME

CURVE TABLE

C1	R: 5'
C2	R: 15'
C3	R: 25'
C4	R: 70'

LEGEND: SITE

- PROPOSED HC ACCESSIBLE PARKING SPACE (SEE SITE DETAIL)
- L1 — LINEAR DIMENSION
- C1 — PROPOSED CURVE RADIUS DIMENSION
- PROPOSED SIGN
- PROPOSED PRECAST WHEEL STOP
- PROPOSED TRAFFIC ARROW (SEE SITE DETAIL)
- PROPOSED STOP BAR (SEE SITE DETAIL)
- PROPOSED HEAVY DUTY ASPHALT PAVEMENT
- PROPOSED CONCRETE PAVEMENT
- PROPOSED PERVIOUS CONCRETE

ICE GROUP
INGRAM CIVIL ENGINEERING, LLC
240 WILSON PIKE CIRCLE, SUITE 200
BRENTWOOD, TN 37027
615.370.7964 OFFICE
615.370.1273 FAX
TENNESSEE LICENSE No.: 104476
CURTIS P. INGRAM JR.

ESa
ESa Architects
richard l. miller, architect
2100 West End Avenue, Suite 1200
Vanderbilt Plaza
Nashville Tennessee 37203
615-329-9445

This drawing and the design shown is the property of the architect. The reproduction, copying or use of this drawing without their written consent is prohibited and any infringement will be subject to legal action.
© ESa Architects 2010

Seals

CURTIS P. INGRAM JR. REGISTERED ENGINEER AGRICULTURE COMMERCE No. 104476 STATE OF TENNESSEE 2-4-14

AGENCY REVIEW SET

NASHVILLE BALLET EXPANSION AND RENOVATION

3630 REDMON STREET - NASHVILLE, TN

Revisions

No.	Date	Description

Issue Description	
Issue Date	1-21-2013
Project No	P1200.24
Drawn By	Author
Checked By	Checker

Drawing Title

SITE PLAN

Sheet Number

C200

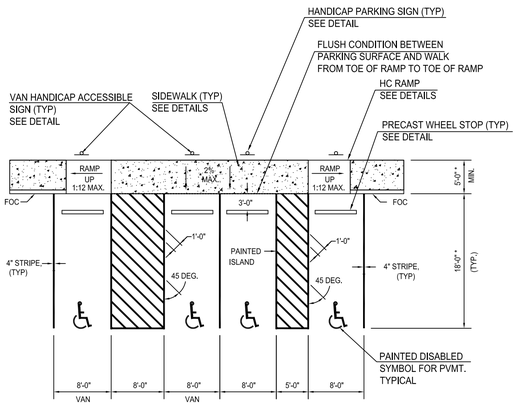

* ALL AREAS INSIDE PARKING, LOADING AISLES AND WALKS DIRECTLY IN FRONT OF ACCESSIBLE SPACES SHALL BE LESS THAN 2% SLOPE IN ALL DIRECTIONS.

* COORDINATE DIMENSIONS WITH SITE PLAN

ACCESSIBLE PARKING SPACE LAYOUT
(NOT TO SCALE)

5

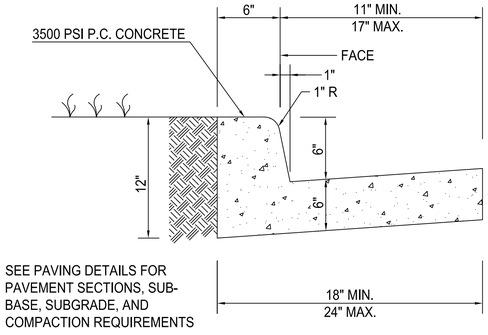

SEE PAVING DETAILS FOR PAVEMENT SECTIONS, SUB-BASE, SUBGRADE, AND COMPACTION REQUIREMENTS

18" MIN.
24" MAX.

CONCRETE CURB & GUTTER
(NOT TO SCALE)

NOTE: A GEOTECH REPORT WITH PAVEMENT RECOMENDATIONS WAS NOT PROVIDED TO THE ENGINEER FOR DESIGN PURPOSES, SECTIONS ARE BASED ON STANDARD ENGINEERING PRACTICE.

3

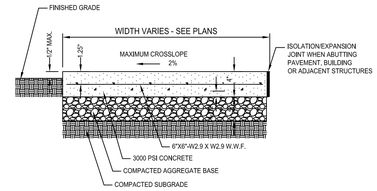

TRANSVERSE SECTION

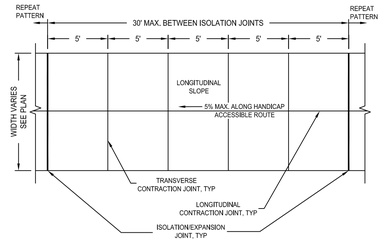

WALK WIDTH	LONGITUDINAL CONT. JOINT
0' - 5'-11"	NONE
6' - 7'-11"	ONE ALONG WALK AT CENTERLINE
8' - 12'	TWO ALONG WALK AT THIRD POINTS

PARTIAL PLAN

SEE TYPICAL JOINT AND JOINT SEALANT DETAILS
COORDINATE WITH TECHNICAL SPECIFICATIONS.

CONCRETE WALK (TYP)
(NOT TO SCALE)

NOTE: A GEOTECH REPORT WITH PAVEMENT RECOMENDATIONS WAS NOT PROVIDED TO THE ENGINEER FOR DESIGN PURPOSES, SECTIONS ARE BASED ON STANDARD ENGINEERING PRACTICE.

1

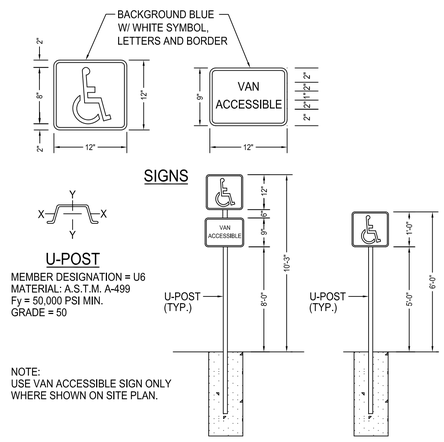

NOTE:
USE VAN ACCESSIBLE SIGN ONLY WHERE SHOWN ON SITE PLAN.

ACCESSIBLE PARKING SIGNS
(NOT TO SCALE)

NOTE:
SIGNS DESIGNATING DISABLED PARKING SHALL INDICATE THAT UNAUTHORIZED OR IMPROPERLY PARKED VEHICLES MAY BE TOWED AND THE DRIVER FINED TWO HUNDRED DOLLARS ($200), AND SHALL ALSO PROVIDE THE NAME AND TELEPHONE NUMBER OF THE TOWING COMPANY OR THE NAME AND TELEPHONE NUMBER OF THE PROPERTY OWNER, LESSEE OR AGENT IN CONTROL OF THE PROPERTY.

6

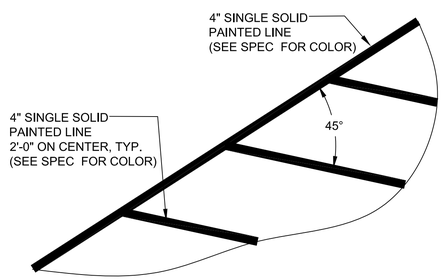

NOTE: ALL DIMENSIONS ARE TO ℄ OF STRIPE UNLESS OTHERWISE INDICATED
COORDINATE WITH SITE PLAN

STRIPING (TYP)
(NOT TO SCALE)

4

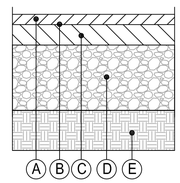

Ⓐ 1.5" ASPHALTIC SURFACE COURSE

Ⓑ TACK COAT

Ⓒ 2" ASPHALTIC BINDER

Ⓓ 6" CRUSHED AGGREGATE COMPACTED TO 100% STANDARD PROCTOR.

Ⓔ 8" COMPACTED SUBGRADE TO 98% MAXIMUM DRY DENSITY.

ASPHALT PAVEMENT SECTION (HEAVY DUTY)
(NOT TO SCALE)

NOTE: A GEOTECH REPORT WITH PAVEMENT RECOMENDATIONS WAS NOT PROVIDED TO THE ENGINEER FOR DESIGN PURPOSES, SECTIONS ARE BASED ON STANDARD ENGINEERING PRACTICE.

2

ICE GROUP
INGRAM CIVIL ENGINEERING, LLC
240 WILSON PIKE CIRCLE, SUITE 200
BRENTWOOD, TN 37027
615.370.7964 OFFICE
615.370.1273 FAX
TENNESSEE LICENSE No.: 104476
CURTIS P. INGRAM JR.

CASE NO.: 2014SP-011-001

ESa
ESa Architects
richard l. miller, architect
2100 West End Avenue, Suite 1200
Vanderbilt Plaza
Nashville Tennessee 37203
615-329-9445

This drawing and the design shown is the property of the architect. The reproduction, copying or use of this drawing without their written consent is prohibited and any infringement will be subject to legal action.

© ESa Architects 2010

Seals

AGENCY REVIEW SET

NASHVILLE BALLET
EXPANSION AND RENOVATION

3630 REDMON STREET - NASHVILLE, TN

Revisions △

No.	Date	Description

Issue Description	
Issue Date	1-21-2013
Project No	P1200.24
Drawn By Author	Checked By Checker

Drawing Title

SITE
DETAILS

Sheet Number

C210

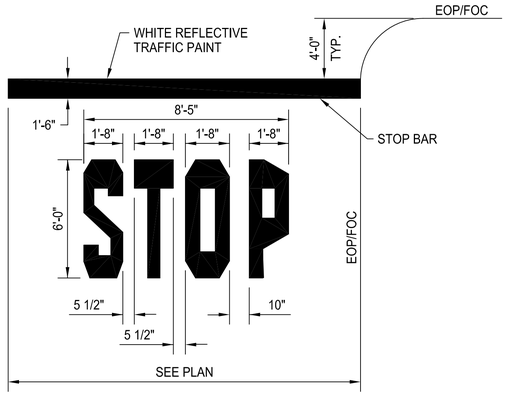

STOP BAR
(NOT TO SCALE)

11

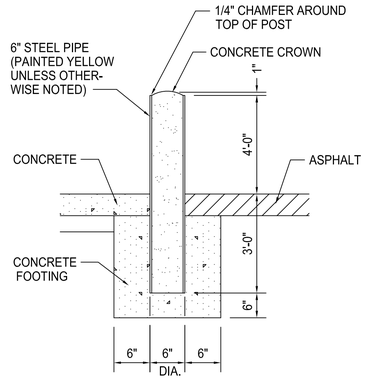

BOLLARD SHALL BE PAINTED YELLOW WITH EXTERIOR ENAMEL PAINT (2 COATS BEFORE INSTALLATION; 1 COAT AFTER INSTALLATION)
INSTALL 4" WIDE REFLECTIVE TAPE AT TOP.

PIPE BOLLARD
(NOT TO SCALE)

9

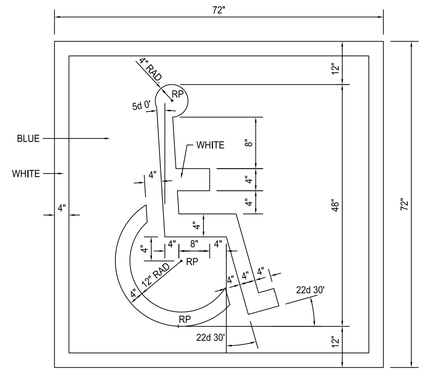

NOTES:
1. RP = RADIUS POINT
2. PROVIDE PAINT COLOR IN ACCORDANCE WITH LOCAL REQUIREMENTS. (TYPICALLY WHITE SYMBOL ON BLUE SQUARE BACKGROUND WITH 4" WHITE BORDER)

ACCESSIBLE SYMBOL-PAINTED
(NOT TO SCALE)

7

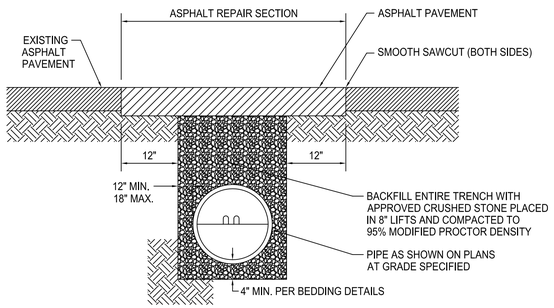

ASPHALT STREET OR DRIVE CUT / REPAIR
(NOT TO SCALE)

NOTE: A GEOTECH REPORT WITH PAVEMENT RECOMENDATIONS WAS NOT PROVIDED TO THE ENGINEER FOR DESIGN PURPOSES, SECTIONS ARE BASED ON STANDARD ENGINEERING PRACTICE.

12

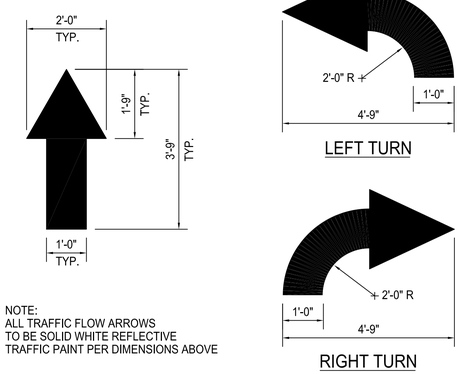

NOTE:
ALL TRAFFIC FLOW ARROWS
TO BE SOLID WHITE REFLECTIVE
TRAFFIC PAINT PER DIMENSIONS ABOVE

TRAFFIC FLOW ARROW
(NOT TO SCALE)

10

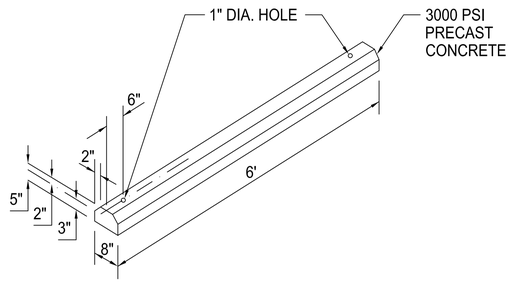

REQUIRES 2 - #4 X 2'-0" STEEL BAR STAKES FOR EACH CURB SECTION. CURB REINFORCED W/ 2 #3 REBARS. LOCATE PARKING CURB 3' FROM FACE OF SIDEWALK HEADER OR EDGE OF PAVEMENT.

WHEEL STOP
(NOT TO SCALE)

8

CASE NO.: 2014SP-011-001

ESa Architects
richard l. miller, architect
2100 West End Avenue, Suite 1200
Vanderbilt Plaza
Nashville Tennessee 37203
615-329-9445

This drawing and the design shown is the property of the architect. The reproduction, copying or use of this drawing without their written consent is prohibited and any infringement will be subject to legal action.

© ESa Architects 2010

Seals

AGENCY REVIEW SET

NASHVILLE BALLET EXPANSION AND RENOVATION

3630 REDMON STREET - NASHVILLE, TN

Revisions △

No.	Date	Description

Issue Description	
Issue Date	1-21-2013
Project No	P1200.24
Drawn By Author	Checked By Checker

Drawing Title

SITE
DETAILS

Sheet Number

C220

ICE GROUP
INGRAM CIVIL ENGINEERING, LLC
240 WILSON PIKE CIRCLE, SUITE 200
BRENTWOOD, TN 37027
615.370.7964 OFFICE
615.370.1273 FAX
TENNESSEE LICENSE No.: 104476
CURTIS P. INGRAM JR.

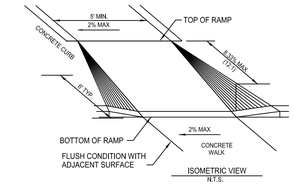

ISOMETRIC VIEW
N.T.S.

NOTES:

1. THE SURFACE OF RAMP SHALL HAVE A TRUNCATED DOME SURFACE.
2. THE BOTTOM OF THE RAMP SHALL HAVE A 1/2" LIP ANGLED AT 45 DEGREES.
3. CONSTRUCT PER A.D.A. STANDARDS.
4. FOR THE PURPOSES OF WARNING, THE FULL WIDTH AND DEPTH OF THE CURB RAMP SHALL HAVE A LIGHT REFLECTIVE VALUE AND TEXTURE THAT SIGNIFICANTLY CONTRASTS WITH THAT OF ADJOINING PEDESTRIAN ROUTES. COORDINATE WITH SITE SPECIFICATIONS.
5. THE FULL LENGTH AND WIDTH OF THE RAMP SHALL RAMP SHALL HAVE DETECTABLE WARNING TRUNCATED DOMES PER ADAAG 4.7.7 DETECTABLE WARNINGS.

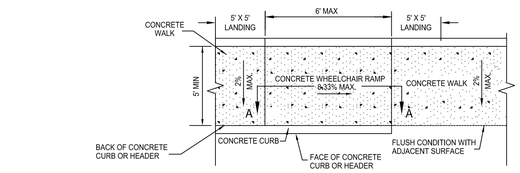

PLAN

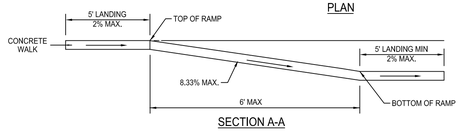

SECTION A-A

ACCESSIBLE CURB RAMP
(NOT TO SCALE)

15

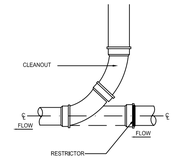

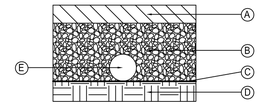

LIGHT DUTY PAVEMENT STORAGE SECTION

- (A) 6" PERMEABLE CONCRETE LAYER
- (B) MIN. 24" WASHED, BANK-RUN GRAVEL 1.5 TO 2.5 INCHES IN DIAMETER WITH VOID SPACE OF ABOUT 40%.SEE SHEET C402 FOR STONE DEPTH.
- (C) FILTER FABRIC
- (D) SUBGRADE, MINIMAL COMPACTION
- (E) 6" PERFORATED PIPE

SEE SPECIFICATIONS FOR MATERIAL REQUIREMENTS

PERVIOUS PAVEMENT SECTION
(NOT TO SCALE)

NOTE: A GEOTECH REPORT WITH PAVEMENT RECOMENDATIONS WAS NOT PROVIDED TO THE ENGINEER FOR DESIGN PURPOSES, SECTIONS ARE BASED ON STANDARD ENGINEERING PRACTICE.

13

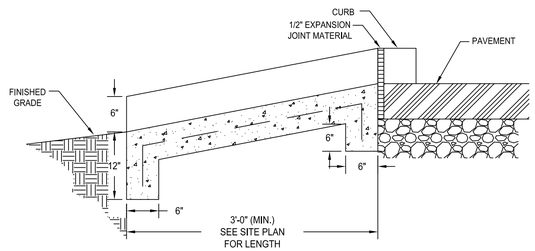

SECTION B-B

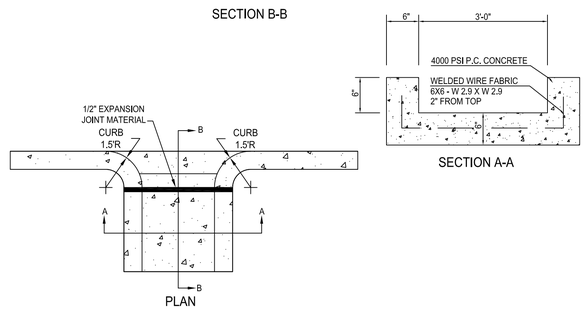

SECTION A-A

PLAN

CONCRETE FLUME 3 FT
(NOT TO SCALE)

16

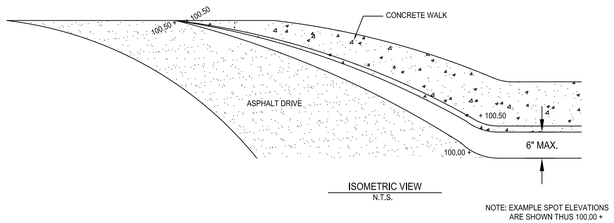

ISOMETRIC VIEW
N.T.S.

NOTE: EXAMPLE SPOT ELEVATIONS ARE SHOWN THUS 100.00 +

CURB TRANSITION
(NOT TO SCALE)

14

CASE NO.: 2014SP-011-001

ESa Architects

richard l. miller, architect
2100 West End Avenue, Suite 1200
Vanderbilt Plaza
Nashville Tennessee 37203
615-329-9445

This drawing and the design shown is the property of the architect. The reproduction, copying or use of this drawing without their written consent is prohibited and any infringement will be subject to legal action.

© ESa Architects 2010

Seals

AGENCY REVIEW SET

NASHVILLE BALLET EXPANSION AND RENOVATION

3630 REDMON STREET - NASHVILLE, TN

Revisions △

No.	Date	Description

Issue Description	
Issue Date	1-21-2013
Project No	P1200.24
Drawn By: Author	Checked By: Checker

Drawing Title

SITE DETAILS

Sheet Number

C230

ICE GROUP

INGRAM CIVIL ENGINEERING, LLC
240 WILSON PIKE CIRCLE, SUITE 200
BRENTWOOD, TN 37027
615.370.7964 OFFICE
615.370.1273 FAX
TENNESSEE LICENSE No.: 104476
CURTIS P. INGRAM JR.

NOTE:
COMMON AREAS WILL BE MAINTAINED
ACCORDING TO THE CONDOMINIUM ASSOCIATION BYLAWS.
MASTER DEED INST. NO. 20010126-0008124

GENERAL GRADING NOTES

1. PRIOR TO INSTALLATION OF STORM OR SANITARY SEWER, THE CONTRACTOR SHALL EXCAVATE, VERIFY AND CALCULATE ALL CROSSINGS AND INFORM THE OWNER AND THE ENGINEER OF ANY CONFLICTS PRIOR TO CONSTRUCTION. THE ENGINEER WILL BE HELD HARMLESS IN THE EVENT THE ENGINEER IS NOT NOTIFIED OF DESIGN CONFLICTS.

2. ALL SLOPES AND AREAS DISTURBED BY CONSTRUCTION SHALL BE GRADED SMOOTH AND SIX INCHES OF TOPSOIL APPLIED. IF ADEQUATE TOPSOIL IS NOT AVAILABLE ON SITE, THE CONTRACTOR SHALL PROVIDE TOPSOIL, APPROVED BY THE OWNER, AS NEEDED. THE AREA SHALL THEN BE SEEDED, FERTILIZED, MULCHED, WATERED AND MAINTAINED UNTIL HARDY GRASS GROWTH IS ESTABLISHED IN ALL AREAS (SEE LANDSCAPE PLAN FOR SEED MIX AND PROPER APPLICATION RATE). ANY AREAS DISTURBED FOR ANY REASON PRIOR TO FINAL ACCEPTANCE OF THE PROJECT SHALL BE CORRECTED BY THE CONTRACTOR AT NO ADDITIONAL COST TO THE OWNER.

3. THE CONTRACTOR IS SPECIFICALLY CAUTIONED THAT THE LOCATION AND/OR ELEVATION OF EXISTING UTILITIES AS SHOWN ON THESE PLANS IS BASED ON RECORDS OF THE VARIOUS UTILITY COMPANIES, AND WHERE POSSIBLE, MEASUREMENTS TAKEN IN THE FIELD. THE INFORMATION IS NOT TO BE RELIED ON AS BEING EXACT OR COMPLETE. THE CONTRACTOR IS RESPONSIBLE TO FIELD VERIFY LOCATIONS OF ANY UNDERGROUND UTILITIES. THE CONTRACTOR IS TO VERIFY LOCATION OF OVERHEAD UTILITIES. THE CONTRACTOR MUST CALL THE APPROPRIATE UTILITY COMPANY AT LEAST 48 HOURS BEFORE ANY EXCAVATION TO REQUEST EXACT FIELD LOCATION OF UTILITIES.

4. THE CONTRACTOR IS TO CONTROL TRAFFIC FLOW DURING TIME OF CONSTRUCTION. ANY AND ALL TRAFFIC CONTROL IMPLEMENTED DURING THIS PROJECT SHALL CONFORM TO THE MANUAL OF UNIFORM TRAFFIC CONTROL DEVICES.

5. ALL WORK WITHIN PUBLIC RIGHT-OF-WAY SHALL BE IN ACCORDANCE WITH CITY OF NASHVIILE/DAVIDSON COUNTY AND THE TENNESSEE D.O.T. REGULATIONS.

6. CONTRACTOR TO COORDINATE LOCATION OF TOP SOIL STOCKPILE AREA WITH OWNER. SILT FENCE SHALL BE PLACED AROUND PERIMETER OF THE STOCKPILE FOR EROSION AND SEDIMENT CONTROL.

7. THE CONTRACTOR SHALL GIVE ALL NECESSARY NOTICES, OBTAIN ALL PERMITS, AND PAY ALL PERMIT FEES. THE CONTRACTOR SHALL CONFORM TO ALL STATE AND LOCAL CODES AND ORDINANCES AND RECEIVE APPROPRIATE APPROVALS WHERE REQUIRED PRIOR TO COMMENCEMENT OF THE WORK.

8. ALL LANDSCAPED SLOPES SHALL BE THREE FEET (3') HORIZONTAL TO ONE FOOT (1') VERTICAL OR FLATTER.

9. CONTOUR LINES AND SPOT ELEVATIONS ARE THE RESULT OF A DETAILED ENGINEERING DESIGN AND REFLECT A PLANNED INTENT WITH REGARD TO EARTHWORK AND DRAINAGE. SHOULD CONTRACTOR HAVE QUESTIONS WITH THIS INTENT, HE SHALL CONTACT THE ARCHITECT PRIOR TO COMMENCEMENT OF WORK.

10. SLOPE GROUND AWAY FROM BUILDING AT TWO PERCENT (2%) MINIMUM.

GRADING NOTES

A	29 LF OF SEGMENTAL RETAINING WALL

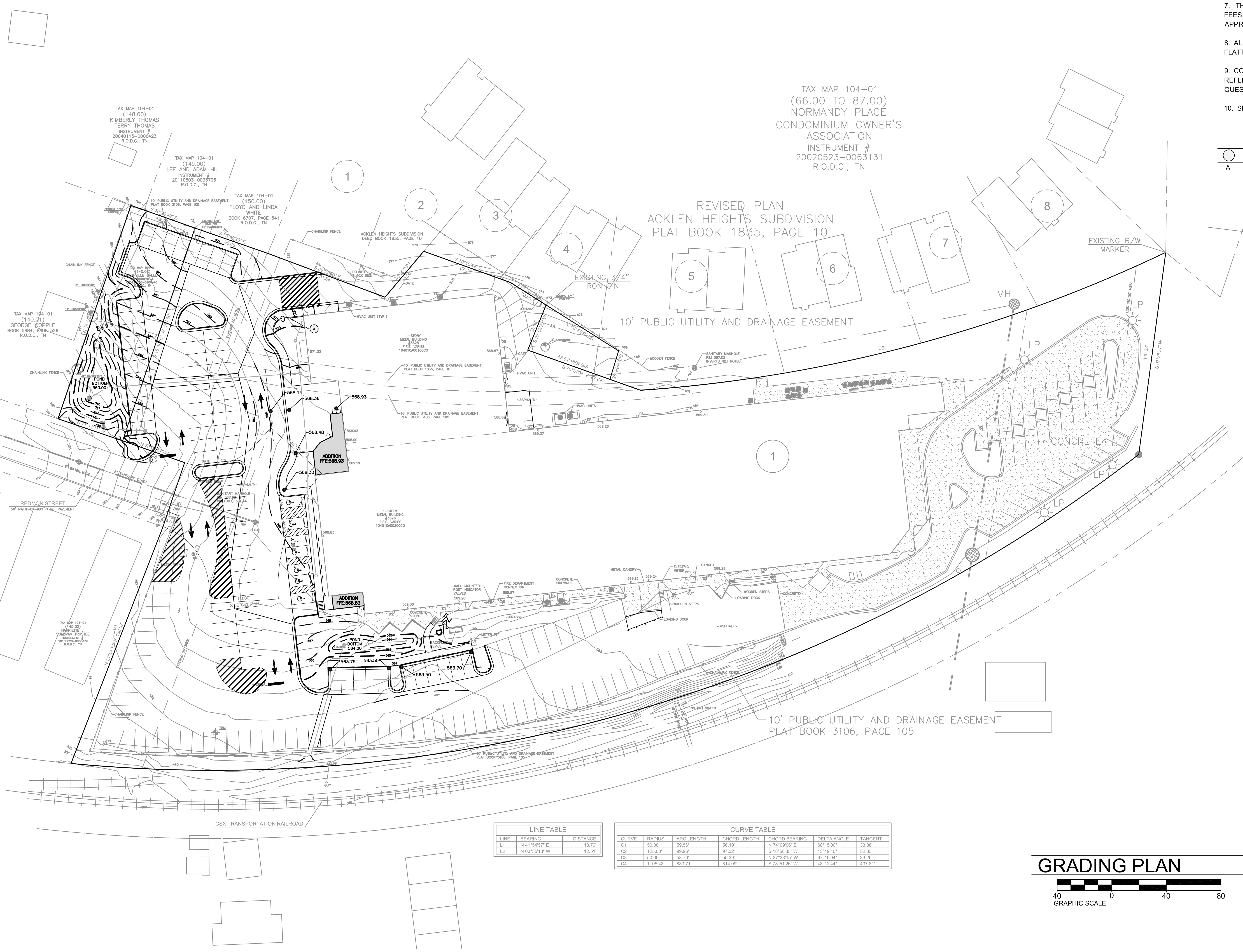

LINE TABLE		
LINE	BEARING	DISTANCE
L1	N 41°54'57" E	13.70'
L2	N 03°55'13" W	12.51'

CURVE TABLE						
CURVE	RADIUS	ARC LENGTH	CHORD LENGTH	CHORD BEARING	DELTA ANGLE	TANGENT
C1	50.00'	59.56'	56.10'	N 74°09'06" E	68°15'00"	33.88'
C2	125.00'	99.96'	97.32'	S 18°58'35" W	45°49'10"	52.83'
C3	50.00'	58.70'	55.39'	N 37°33'15" W	67°16'04"	33.26'
C4	1105.43'	833.71'	814.09'	S 73°51'26" W	43°12'44"	437.81'

GRADING PLAN

40 0 40 80
GRAPHIC SCALE

CASE NO.: 2014SP-011-001

ICE GROUP
INGRAM CIVIL ENGINEERING, LLC
240 WILSON PIKE CIRCLE, SUITE 200
BRENTWOOD, TN 37027
615.370.7964 OFFICE
615.370.1273 FAX
TENNESSEE LICENSE No.: 104476
CURTIS P. INGRAM JR.

ESa Architects
richard l. miller, architect
2100 West End Avenue, Suite 1200
Vanderbilt Plaza
Nashville Tennessee 37203
615-329-9445

This drawing and the design shown is the property of the architect. The reproduction, copying or use of this drawing without their written consent is prohibited and any infringement will be subject to legal action.
© ESa Architects 2010

Seals

CURTIS P. INGRAM, JR. REGISTERED ENGINEER AGRICULTURE COMMERCE No. 104476 STATE OF TENNESSEE

1-21-14

AGENCY REVIEW SET

NASHVILLE BALLET EXPANSION AND RENOVATION

3630 REDMON STREET - NASHVILLE, TN

Revisions

No.	Date	Description

Issue Description

Issue Date 1-21-2013

Project No P1200.24

Drawn By Author | Checked By Checker

Drawing Title

GRADING PLAN

Sheet Number

C300

ACCESSIBILITY BLOW UP

GRAPHIC SCALE 10 0 10 20

LEGEND: ACCESSIBILTY

ACCESSIBILITY ROUTE

ACCESSIBILTY NOTES

A ACCESSIBILITY ROUTE

B FLUSH CONDITION

NOTE:
COMMON AREAS WILL BE MAINTAINED
ACCORDING TO THE CONDOMINIUM ASSOCIATION BYLAWS.
MASTER DEED INST. NO. 20010126-0008124

CASE NO.: 2014SP-011-001

ESa Architects

richard l. miller, architect
2100 West End Avenue, Suite 1200
Vanderbilt Plaza
Nashville Tennessee 37203
615-329-9445

This drawing and the design shown is the property of the architect. The reproduction, copying or use of this drawing without their written consent is prohibited and any infringement will be subject to legal action.

© ESa Architects 2010

Seals

AGENCY REVIEW SET

NASHVILLE BALLET
EXPANSION AND RENOVATION

3630 REDMON STREET - NASHVILLE, TN

Revisions

No.	Date	Description

Issue Description	
Issue Date	1-21-2013
Project No	P1200.24
Drawn By Author	Checked By Checker

Drawing Title

ACCESSIBILTY PLAN

Sheet Number

C301

ICE GROUP

INGRAM CIVIL ENGINEERING, LLC
240 WILSON PIKE CIRCLE, SUITE 200
BRENTWOOD, TN 37027
615.370.7964 OFFICE
615.370.1273 FAX
TENNESSEE LICENSE No.: 104476
CURTIS P. INGRAM JR.

PRE DEVELOPED DRAINAGE AREAS

	Impervious		Pervious		Total	
	Square Feet	**Acres**	**Square Feet**	**Acres**	**Square Feet**	**Acres**
Area 1	17,967	0.41	0	0.00	17,967	0.41
Area 2	4,492	0.10	859	0.02	5,351	0.12
Area 3	39,947	0.92	12,200	0.28	52,147	1.20
Area 4	38,388	0.88	10,296	0.24	48,684	1.12
Total	100,794	2.31	23,355	0.54	124,149	2.85

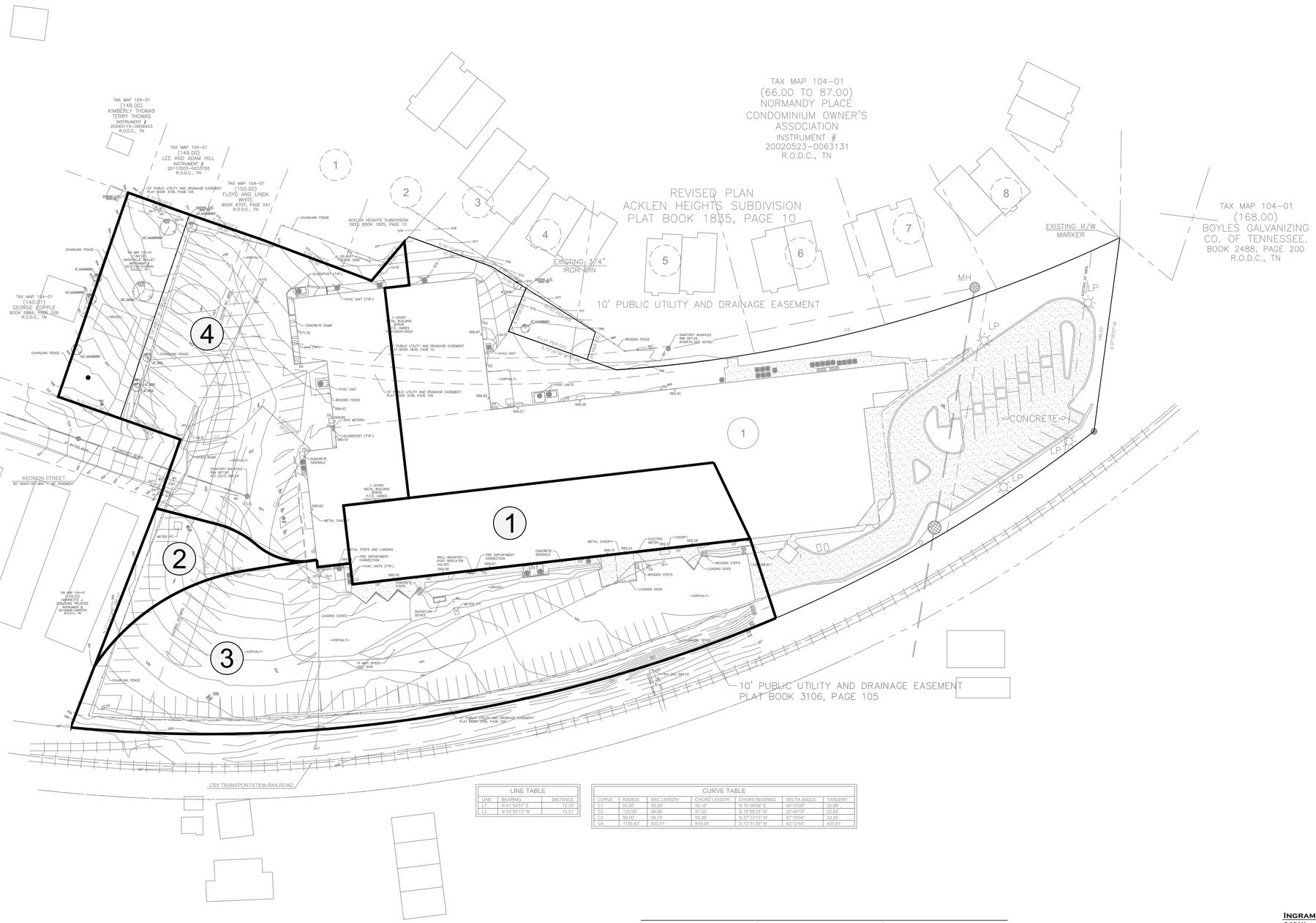

LINE TABLE		
LINE	BEARING	DISTANCE
L1	N 41°54'57" E	13.70'
L2	N 03°55'13" W	12.51'

CURVE TABLE						
CURVE	RADIUS	ARC LENGTH	CHORD LENGTH	CHORD BEARING	DELTA ANGLE	TANGENT
C1	50.00'	59.56'	56.10'	N 74°09'06" E	68°15'07"	33.88'
C2	125.00'	99.96'	97.32'	S 18°58'35" W	45°49'10"	52.83'
C3	50.00'	58.70'	55.39'	N 37°33'55" W	67°16'04"	33.26'
C4	1105.43'	633.71'	814.09'	S 73°51'26" W	43°12'44"	437.81'

PRE-DEVELOPED DRAINAGE MAP

GRAPHIC SCALE 40 0 40 80

CASE NO.: 2014SP-011-001

ESa Architects

richard l. miller, architect
2100 West End Avenue, Suite 1200
Vanderbilt Plaza
Nashville Tennessee 37203
615-329-9445

This drawing and the design shown is the property of the architect. The reproduction, copying or use of this drawing without their written consent is prohibited and any infringement will be subject to legal action.

© ESa Architects 2010

Seals

AGENCY REVIEW SET

NASHVILLE BALLET EXPANSION AND RENOVATION

3630 REDMON STREET - NASHVILLE, TN

Revisions

No.	Date	Description

Issue Description	
Issue Date	1-21-2013
Project No	P1200.24
Drawn By Author	**Checked By** Checker

Drawing Title

PRE-DEVELOPED DRAINAGE MAP

Sheet Number

C400

ICE GROUP

INGRAM CIVIL ENGINEERING, LLC
240 WILSON PIKE CIRCLE, SUITE 200
BRENTWOOD, TN 37027
615.370.7964 OFFICE
615.370.1273 FAX
TENNESSEE LICENSE No.: 104476
CURTIS P. INGRAM JR.

POST DEVELOPED DRAINAGE AREAS

	Impervious		Pervious		Total	
	Square Feet	Acres	Square Feet	Acres	Square Feet	Acres
Area 1	13,148	0.30	0	0.00	13,148	0.30
Area 2	4,450	0.10	901	0.02	5,351	0.12
Area 3	17,988	0.41	4,867	0.11	22,855	0.52
Area 4	6,140	0.14	2,477	0.06	8,617	0.20
Area 5	1,349	0.03	1,174	0.03	2,523	0.06
Area 6	33,991	0.78	10,923	0.25	44,914	1.03
Area 7	6,675	0.15	3,263	0.07	9,938	0.23
Area 8	3,517	0.08	874	0.02	4,391	0.10
Area 9	0	0.00	2,143	0.05	2,143	0.05
Area 10	0	0.00	1,710	0.04	1,710	0.04
Area 11	8,547	0.20	0	0.00	8,547	0.20
Total	95,805	2.20	28,332	0.65	124,137	2.85

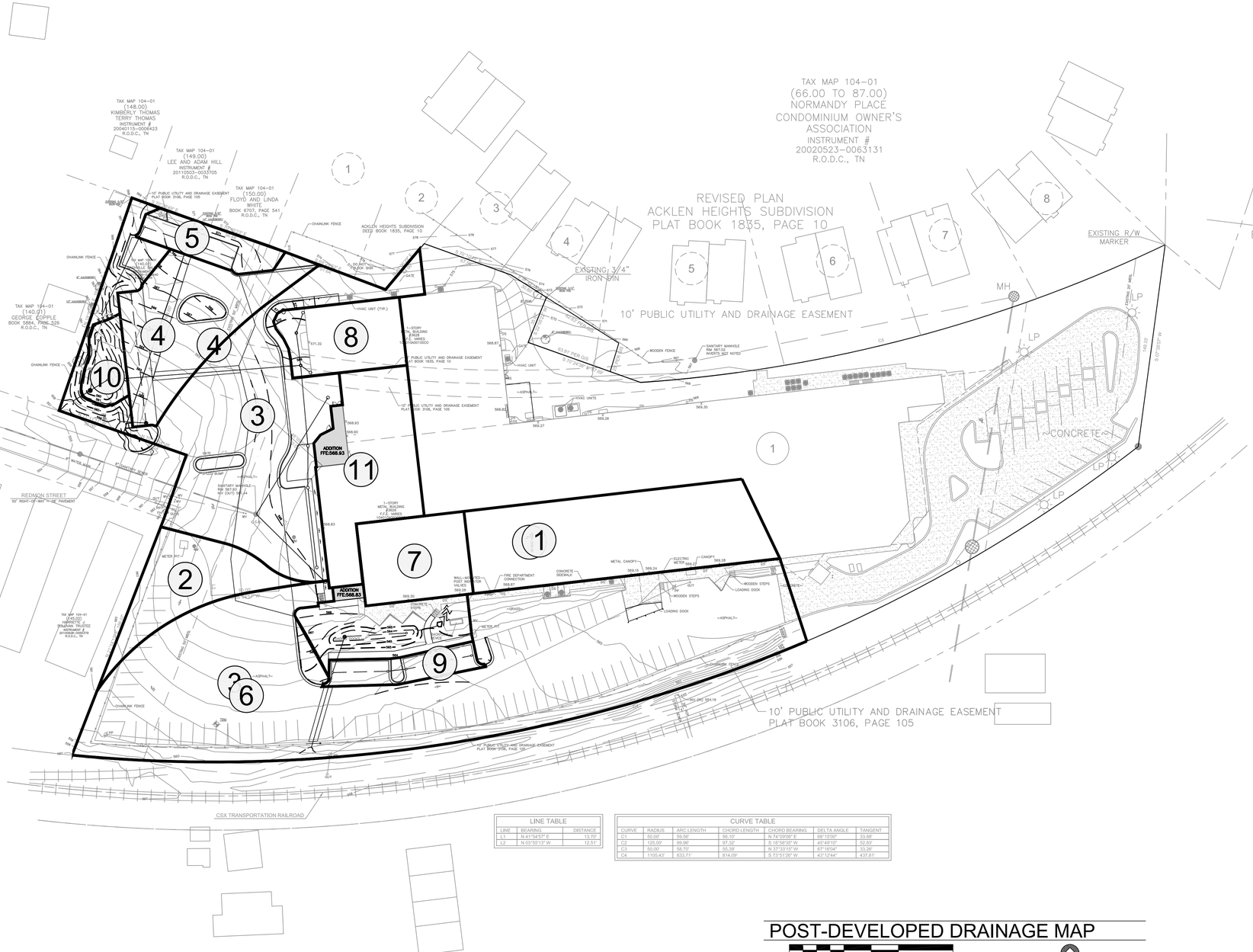

LINE TABLE		
LINE	BEARING	DISTANCE
L1	N 41°54'57" E	13.79'
L2	N 03°56'13" W	12.51'

CURVE TABLE						
CURVE	RADIUS	ARC LENGTH	CHORD LENGTH	CHORD BEARING	DELTA ANGLE	TANGENT
C1	50.00'	59.56'	56.10'	N 74°09'06" E	68°15'00"	33.88'
C2	125.00'	99.96'	97.32'	S 18°58'35" W	45°49'10"	52.83'
C3	50.00'	58.70'	55.39'	N 37°33'15" W	67°16'04"	33.26'
C4	1105.43'	633.71'	814.09'	S 73°53'26" W	43°12'44"	437.61'

POST-DEVELOPED DRAINAGE MAP

GRAPHIC SCALE 40 0 40 80

CASE NO.: 2014SP-011-001

ESa Architects

richard l. miller, architect
2100 West End Avenue, Suite 1200
Vanderbilt Plaza
Nashville Tennessee 37203
615-329-9445

This drawing and the design shown is the property of the architect. The reproduction, copying or use of this drawing without their written consent is prohibited and any infringement will be subject to legal action.

© ESa Architects 2010

Seals

AGENCY REVIEW SET

NASHVILLE BALLET EXPANSION AND RENOVATION

3630 REDMON STREET - NASHVILLE, TN

Revisions △

No.	Date	Description

Issue Description	
Issue Date	1-21-2013
Project No	P1200.24
Drawn By Author	Checked By Checker

Drawing Title

POST-DEVELOPED DRAINAGE MAP

ICE GROUP

INGRAM CIVIL ENGINEERING, LLC
240 WILSON PIKE CIRCLE, SUITE 200
BRENTWOOD, TN 37027
615.370.7964 OFFICE
615.370.1273 FAX
TENNESSEE LICENSE No.: 104476
CURTIS P. INGRAM JR.

Sheet Number

C401

10-YR STORM CALCULATIONS (RATIONAL)

Element ID	From (Inlet) Node	To (Outlet) Node	Length	Inlet Invert Elevation	Outlet Invert Elevation	Total Drop	Average Slope	Pipe Shape	Pipe Diameter or Height	Manning's Roughness	Entrance Losses	Exit/Bend Losses	Peak Flow	Time of Peak Flow Occurrence	Max Flow Velocity	Travel Time	Design Flow Capacity	Max Flow / Design Flow Ratio	Max Flow Depth / Total Depth Ratio	Max Flow Depth
			(ft)	(ft)	(ft)	(ft)	(%)		(inches)				(cfs)	(days hh:mm)	(ft/sec)	(min)	(cfs)			(ft)
P1	CO2	EW1	83.00	566.00	560.00	6.00	7.2300	CIRCULAR	12.000	0.0130	0.5000	0.5000	0.05	0 00:09	3.24	0.43	9.58	0.01	0.05	0.05
P11	OS1	EW5	15.00	557.50	557.20	0.30	2.0000	CIRCULAR	12.000	0.0130	0.5000	0.5000	0.99	0 00:08	4.19	0.06	5.04	0.20	0.34	0.34
P14	RDA3	ND2	59.00	564.55	563.64	0.91	1.5400	CIRCULAR	12.000	0.0130	0.5000	0.5000	1.26	0 00:05	4.20	0.23	4.42	0.29	0.41	0.41
P15	RDA4	RDA3	31.00	564.86	564.55	0.31	1.0000	CIRCULAR	12.000	0.0130	0.5000	0.5000	1.27	0 00:05	3.76	0.14	3.56	0.36	0.44	0.44
P16	RDA5	RDA4	59.00	565.45	564.86	0.59	1.0000	CIRCULAR	12.000	0.0130	0.5000	0.5000	1.28	0 00:05	3.49	0.28	3.56	0.36	0.47	0.47
P18	OS2	CO7	27.71	561.50	561.05	0.45	1.6200	CIRCULAR	12.000	0.0130	0.5000	0.5000	0.76	0 00:07	4.35	0.11	4.54	0.17	0.28	0.28
P2	MH1	EW2	19.00	558.80	558.00	0.80	4.2100	CIRCULAR	12.000	0.0130	0.5000	0.5000	0.25	0 00:09	4.03	0.08	7.31	0.03	0.13	0.13
P5	CO7	EW3	57.00	561.05	559.20	1.85	3.2500	CIRCULAR	12.000	0.0130	0.5000	0.5000	0.63	0 00:08	4.96	0.19	6.42	0.10	0.22	0.22
P7	ND2	EW4	134.00	563.64	560.50	3.14	2.3400	CIRCULAR	12.000	0.0130	0.5000	0.5000	1.75	0 00:05	5.94	0.38	5.45	0.32	0.40	0.40

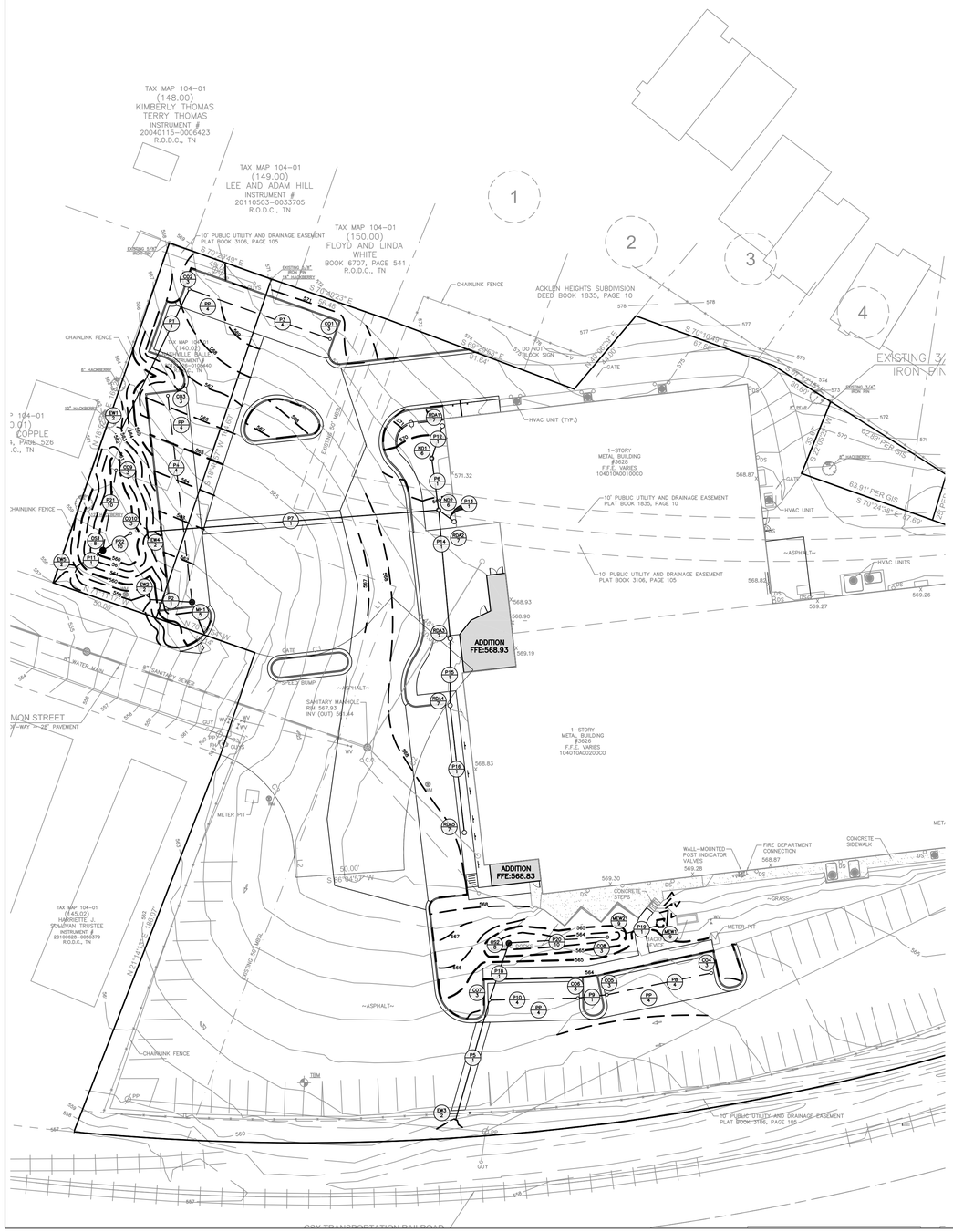

*NOTE:

EW	ENDWALL
CO	CLEAN OUT
ND	NYOPLAST DRAIN
RDA	ROOF DRAIN ADAPTER

- STRUCTURE TYPE AND NUMBER
- DETAIL CALLOUT

STORM DRAINAGE STRUCTURES

STRUCTURE	RIM ELEV.	INVERT ELEV.	TYPE	NOTE
CO1	570,50	567,38	-	-
CO2	568,50	566,00		
CO3	566,30	560,72		
CO4	563,50	561,56		
CO5	563,31	561,32		
CO6	563,31	561,25		
CO7	563,55	561,05		
CO8	564,00	561,72		
CO9	560,00	557,68		
CO10	560,00	557,57		
EW1	-	562,50		
EW2	-	558,00		
EW3	-	559,20		
EW4	-	560,50		
EW5	-	557,20		
MH1	561,30	558,80		
ND1	570,15	564,60		
ND2	569,20	563,64		
RDA1	570,50	564,75		
RDA2	568,50	563,73		
RDA3	568,20	564,55		
RDA4	568,40	564,86		
RDA5	568,12	565,45		
-	-	-		
OS1	560,50	557,50		
OS2	564,50	561,50		
MEW1	-	564,25		
MEW2	-	564,10		

- PIPE NUMBER
- DETAIL CALLOUT

PIPE SCHEDULE

PIPE	LENGTH (FT.)	SIZE (IN.)	TYPE	SLOPE (%)	NOTE
P1	72	12	RCP	4,86	-
P2	19	12	RCP	4,21	-
P3	69	6	PERF, HDPE	2,00	N12 WITH POLYESTER SOCK
P4	96	6	PERF, HDPE	2,00	N12 WITH POLYESTER SOCK
P5	57	12	RCP	3,24	
P6	24	8	HDPE	4,00	
P7	134	12	RCP	2,34	
P8	49	6	PERF, HDPE	0,50	N12 WITH POLYESTER SOCK
P9	14	6	HDPE	0,50	
P10	41	6	PERF, HDPE	0,50	N12 WITH POLYESTER SOCK
P11	15	12	HDPE	2,00	
P12	16	6	HDPE	1,00	
P13	9	6	HDPE	1,00	
P14	59	12	HDPE	1,54	
P15	31	12	HDPE	1,00	
P16	59	12	HDPE	1,00	
P17	-	-	-	-	
P18	28	12	HDPE	1,61	
P19	15	6	HDPE	1,00	
P20	45	6	PERF, HDPE	0,50	N12 WITH POLYESTER SOCK
P21	37	6	PERF, HDPE	0,50	N12 WITH POLYESTER SOCK
P22	15	6	PERF, HDPE	0,50	N12 WITH POLYESTER SOCK

GENERAL DRAINAGE NOTES

1. PRIOR TO INSTALLATION OF STORM OR SANITARY SEWER, THE CONTRACTOR SHALL EXCAVATE, VERIFY AND CALCULATE ALL CROSSINGS AND INFORM THE OWNER AND THE ENGINEER OF ANY CONFLICTS PRIOR TO CONSTRUCTION. THE ENGINEER WILL BE HELD HARMLESS IN THE EVENT THE ENGINEER IS NOT NOTIFIED OF DESIGN CONFLICTS.

2. CONTRACTOR HAS THE OPTION TO BID THE FOLLOWING MATERIAL FOR THE STORM SEWER SYSTEM, EXCEPT WHERE OTHERWISE NOTED: RCP OR SIPP, AS INDICATED ON THIS PLAN, WHERE THE WORD PIPE IS USED. ALL PIPES SHALL HAVE A MAXIMUM ROUGHNESS COEFFICIENT ("N") OF .013 AND SHALL MEET OR EXCEED THE PIPE MANUFACTURERS REQUIREMENTS FOR MINIMUM AND MAXIMUM COVER. CONTRACTOR SHALL REFER TO THE SITE WORK SPECIFICATIONS SECTION FOR STORM SEWER SYSTEMS FOR ACCEPTABLE TYPE AND MATERIAL.

3. THE CONTRACTOR IS SPECIFICALLY CAUTIONED THAT THE LOCATION AND/OR ELEVATION OF EXISTING UTILITIES AS SHOWN ON THESE PLANS IS BASED ON RECORDS OF THE VARIOUS UTILITY COMPANIES, AND WHERE POSSIBLE, MEASUREMENTS TAKEN IN THE FIELD. THE INFORMATION IS NOT TO BE RELIED ON AS BEING EXACT OR COMPLETE. THE CONTRACTOR IS RESPONSIBLE TO FIELD VERIFY LOCATIONS OF ANY UNDERGROUND UTILITIES. THE CONTRACTOR IS TO VERIFY LOCATION OF OVERHEAD UTILITIES. THE CONTRACTOR MUST CALL THE APPROPRIATE UTILITY COMPANY AT LEAST 48 HOURS BEFORE ANY EXCAVATION TO REQUEST EXACT FIELD LOCATION OF UTILITIES.

4. UNLESS OTHERWISE SHOWN, CALLED OUT OR SPECIFIED HEREON OR WITHIN THE SPECIFICATIONS ALL STORM DRAIN PIPES ARE MEASURED FROM CENTER OF STRUCTURES AND ENDS OF FLARED END SECTIONS.

5. THE CONTRACTOR IS TO CONTROL TRAFFIC FLOW DURING TIME OF CONSTRUCTION. ANY AND ALL TRAFFIC CONTROL IMPLEMENTED DURING THIS PROJECT SHALL CONFORM TO THE MANUAL OF UNIFORM TRAFFIC CONTROL DEVICES.

6. ALL WORK WITHIN PUBLIC RIGHT-OF-WAY SHALL BE IN ACCORDANCE WITH CITY OF NASHVILLE/DAVIDSON COUNTY AND THE TENNESSEE D.O.T. REGULATIONS.

7. THE CONTRACTOR SHALL GIVE ALL NECESSARY NOTICES, OBTAIN ALL PERMITS, AND PAY ALL PERMIT FEES. THE CONTRACTOR SHALL CONFORM TO ALL STATE AND LOCAL CODES AND ORDINANCES AND RECEIVE APPROPRIATE APPROVALS WHERE REQUIRED PRIOR TO COMMENCEMENT OF THE WORK.

8. ALL NEW STRUCTURES SHALL HAVE ANY SEDIMENT REMOVED PRIOR TO ACCEPTANCE.

9. CONTOUR LINES AND SPOT ELEVATIONS ARE THE RESULT OF A DETAILED ENGINEERING DESIGN AND REFLECT A PLANNED INTENT WITH REGARD TO EARTHWORK AND DRAINAGE. SHOULD CONTRACTOR HAVE QUESTIONS WITH THIS INTENT, HE SHALL CONTACT THE ARCHITECT PRIOR TO COMMENCEMENT OF WORK.

10. ADJUST ALL CASTINGS TO MATCH FINISH GRADES.

DRAINAGE NOTES

A -

DRAINAGE DETAILS

1	TRENCH AND BEDDING
2	WINGED ENDWALL
3	EXTERIOR CLEANOUT
4	PERVIOUS CONCRETE
5	STORM MANHOLE
6	12" NYLOPLAST DRAIN
7	ROOF DRAIN ADAPTER
8	OUTLET STRUCTURE
9	MITERED END WALL
10	BIO-RETENTION

LEGEND: DRAINAGE

- PROPOSED ENDWALL
- PROPOSED STORM LINE
- PROPOSED CLEANOUT

IN ACCORDANCE WITH THE METRO STORMWATER MANAGEMENT MANUAL, VOLUME 1, SECTION 3.9, AS-BUILT CERTIFICATIONS, MWS STORMWATER DIVISION MUST APPROVE THE FOLLOWING AS-BUILTS PRIOR TO ISSUANCE OF THE USE AND OCCUPANCY PERMIT:

- UNDERGROUND DETENTION AND WATER QUALITY INFRASTRUCTURE
- ABOVE GROUND DETENTION AND WATER QUALITY INFRASTRUCTURE
- PUBLIC STORM SEWER INFRASTRUCTURE
- CUT AND FILL IN THE FLOODPLAIN
- SINK HOLE ALTERATIONS

THE ENGINEER SHALL VISIT WWW.NASHVILLE.GOV/STORMWATER/ASBUILT.HTM FOR SUBMITTAL REQUIREMENTS.

NOTE:
COMMON AREAS WILL BE MAINTAINED ACCORDING TO THE CONDOMINIUM ASSOCIATION BYLAWS. MASTER DEED INST. NO. 20010126-0008124

DRAINAGE PLAN

GRAPHIC SCALE 30 0 30 60

CASE NO.: 2014SP-011-001

ICE GROUP
INGRAM CIVIL ENGINEERING, LLC
240 WILSON PIKE CIRCLE, SUITE 200
BRENTWOOD, TN 37027
615.370.7964 OFFICE
615.370.1273 FAX
TENNESSEE LICENSE No.: 104476
CURTIS P. INGRAM JR.

ESa Architects
richard l. miller, architect
2100 West End Avenue, Suite 1200
Vanderbilt Plaza
Nashville Tennessee 37203
615-329-9445

This drawing and the design shown is the property of the architect. The reproduction, copying or use of this drawing without their written consent is prohibited and any infringement will be subject to legal action.
© ESa Architects 2010

Seals

AGENCY REVIEW SET

NASHVILLE BALLET EXPANSION AND RENOVATION

3630 REDMON STREET - NASHVILLE, TN

Revisions

No.	Date	Description

Issue Description	
Issue Date	1-21-2013
Project No	P1200.24
Drawn By	Author
Checked By	Checker

Drawing Title

DRAINAGE PLAN

Sheet Number

C402

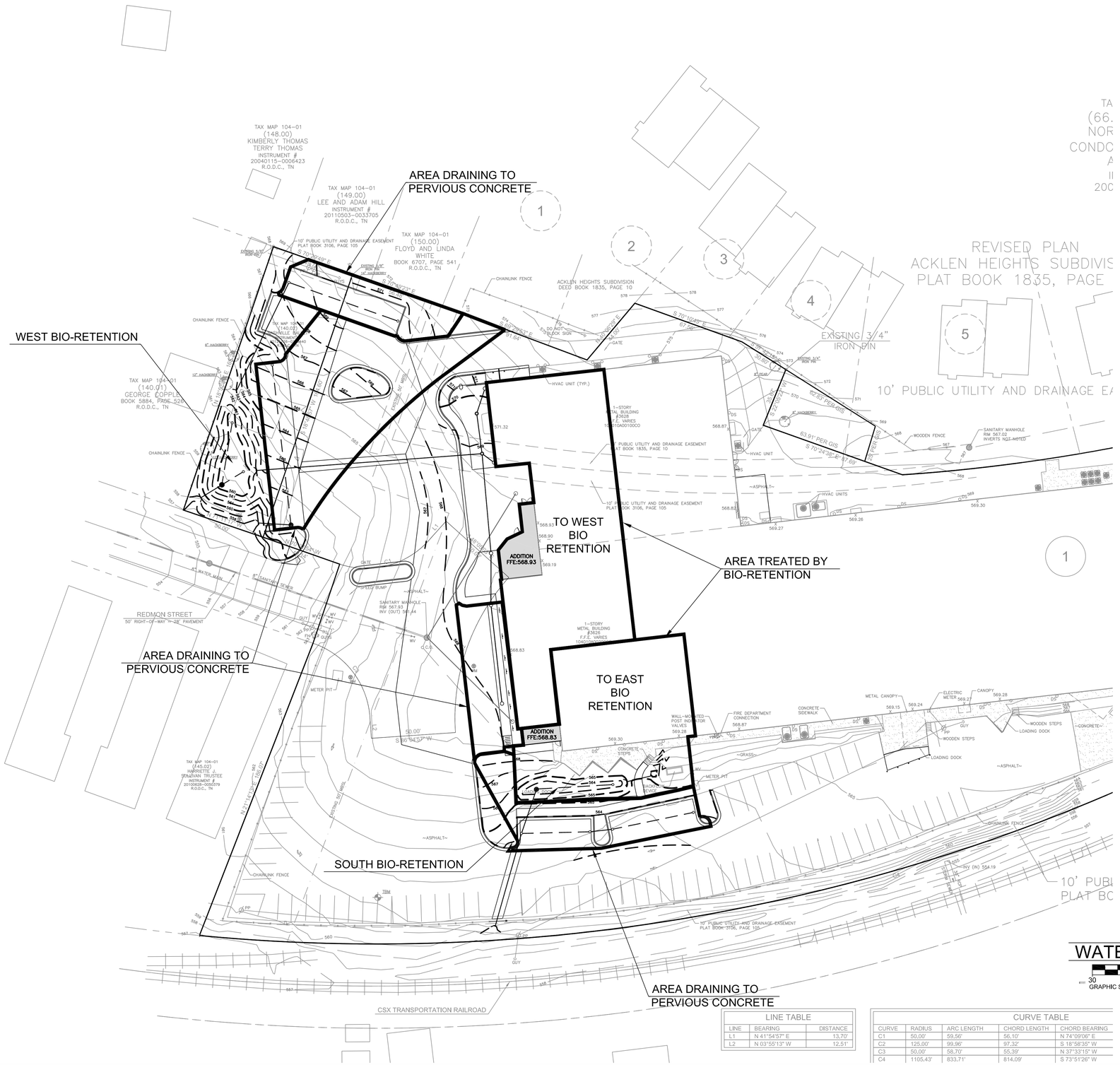
AREA DRAINING TO PERVIOUS CONCRETE
WEST BIO-RETENTION
TO WEST BIO RETENTION
AREA TREATED BY BIO-RETENTION
AREA DRAINING TO PERVIOUS CONCRETE
TO EAST BIO RETENTION
SOUTH BIO-RETENTION
AREA DRAINING TO PERVIOUS CONCRETE
REVISED PLAN ACKLEN HEIGHTS SUBDIVIS PLAT BOOK 1835, PAGE
10' PUBLIC UTILITY AND DRAINAGE EA
EXISTING 3/4" IRON PIN
TAX MAP 104-01 (148.00) KIMBERLY THOMAS TERRY THOMAS INSTRUMENT # 20040115-0006423 R.O.D.C., TN
TAX MAP 104-01 (149.00) LEE AND ADAM HILL INSTRUMENT # 20110503-0033705 R.O.D.C., TN
TAX MAP 104-01 (150.00) FLOYD AND LINDA WHITE BOOK 6707, PAGE 541 R.O.D.C., TN
TAX MAP 104-01 (140.01) GEORGE COPPLE BOOK 5884, PAGE 526 R.O.D.C., TN
TAX MAP 104-01 (145.02) HARRIETTE J. DONAVAN TRUSTEE INSTRUMENT # 20100628-0050379 R.O.D.C., TN
ACKLEN HEIGHTS SUBDIVISION DEED BOOK 1835, PAGE 10
10' PUBLIC UTILITY AND DRAINAGE EASEMENT PLAT BOOK 3106, PAGE 105
10' PUBLIC UTILITY AND DRAINAGE EASEMENT PLAT BOOK 1835, PAGE 10
10' PUBLIC UTILITY AND DRAINAGE EASEMENT PLAT BOOK 3106, PAGE 105
REDMON STREET 50' RIGHT-OF-WAY 32' PAVEMENT
ADDITION FFE:568.93
ADDITION FFE:568.83
1-STORY METAL BUILDING ENGR. F.F.E. VARIES 104010A001000
SANITARY MANHOLE RIM 567.93 INV (OUT) 560.44
SANITARY MANHOLE RIM 567.02 INVERTS NOT NOTED
INV (IN) 554.19
CSX TRANSPORTATION RAILROAD
CHAINLINK FENCE
WOODEN FENCE
CONCRETE STEPS
WOODEN STEPS
LOADING DOCK
METAL CANOPY
CANOPY
ELECTRIC METER
FIRE DEPARTMENT CONNECTION
WALL-MOUNTED POST INDICATOR VALVES
CONCRETE SIDEWALK
HVAC UNIT (TYP.)
HVAC UNIT
HVAC UNITS
~ASPHALT~
~GRASS~
~CONCRETE~
METER PIT
GATE
SPEED BUMP
DO NOT BLOCK SIGN
12" HACKBERRY
8" HACKBERRY
EXISTING 3/4" IRON PIN
EXISTING 1/2" IRON PIN
EXISTING 1/2" IRON PIN W/ CAP
EXISTING 1/2" IRON PIN W/ HACKBERRY
S 70°10'41" E 91.64'
S 70°24'30" E 97.69'
S 70°10'41" E 63.91' PER GIS
S 16°04'57" W 50.00'
N 24°43'39" W 100.00'
N 41°54'57" E 13.70'
N 03°55'13" W 12.51'
EXISTING 20" MAPLE
EXISTING 30" MAPLE
EXISTING 36" MAPLE
EXISTING 24" MAPLE
EXISTING 18" MAPLE
EXISTING 8" MAPLE
EXISTING 6" MAPLE
EXISTING 10" MAPLE
EXISTING 12" MAPLE
EXISTING 14" MAPLE
EXISTING 16" MAPLE
EXISTING 22" MAPLE
EXISTING 26" MAPLE
EXISTING 28" MAPLE
EXISTING 32" MAPLE
EXISTING 34" MAPLE
EXISTING 38" MAPLE
EXISTING 40" MAPLE
EXISTING 42" MAPLE
EXISTING 44" MAPLE
EXISTING 48" MAPLE
EXISTING 50" MAPLE
EXISTING 52" MAPLE
EXISTING 54" MAPLE
EXISTING 56" MAPLE
EXISTING 58" MAPLE
EXISTING 60" MAPLE
EXISTING 62" MAPLE
EXISTING 64" MAPLE
EXISTING 66" MAPLE
EXISTING 68" MAPLE
EXISTING 70" MAPLE
EXISTING 72" MAPLE
EXISTING

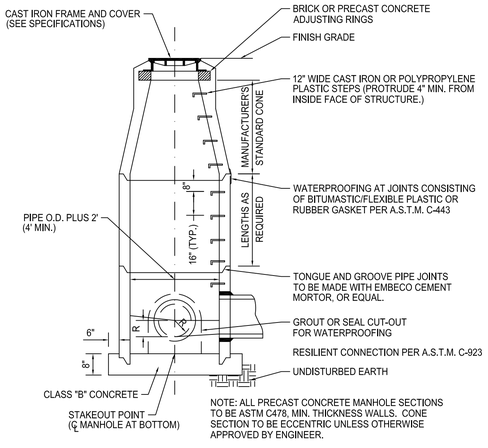

STORM SEWER MANHOLE (TYP)
(NOT TO SCALE)

MH
5

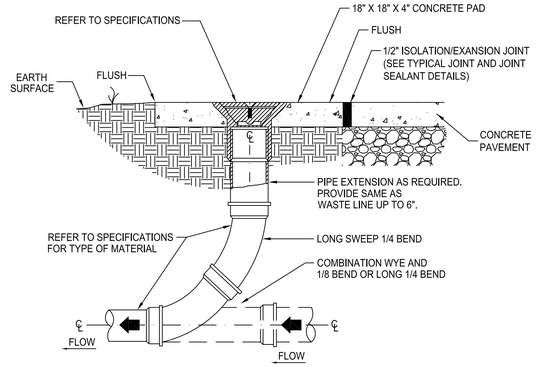

EXTERIOR CLEANOUT
(NOT TO SCALE)

CO
3

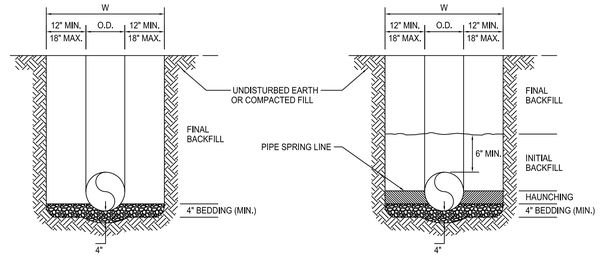

RIGID PIPE
(NOT TO SCALE)

FLEXIBLE PIPE
(NOT TO SCALE)

GENERAL NOTES:

1. BEDDING SHALL BE CLASS I-A WORKED BY HAND. IF GROUNDWATER IS ANTICIPATED, THEN BEDDING SHALL BE CLASS I-B COMPACTED TO 85% STANDARD PROCTOR. (SEE SPECIFICATIONS FOR GRADATION.)
2. HAUNCHING SHALL BE WORKED AROUND THE PIPE BY HAND TO ELIMINATE VOIDS AND SHALL BE CLASS I-A OR CLASS I-B OR CLASS II COMPACTED TO 85% PROCTOR.
3. INITIAL BACKFILL SHALL BE CLASS I-A WORKED BY HAND, OR CLASS I-B OR CLASS II COMPACTED TO 85% STANDARD PROCTOR.
4. INITIAL BACKFILL NOT UNDER PAVED AREAS CAN BE CLASS III COMPACTED TO 90% STANDARD PROCTOR.
5. FINAL BACKFILL SHALL BE CLASS I, II, OR III COMPACTED AS NOTED IN NOTES 3 AND 4.
6. FINAL BACKFILL NOT UNDER PAVED AREAS CAN BE CLASS IV-A COMPACTED TO 95% STANDARD PROCTOR.
7. ALL MATERIALS ARE CLASSIFIED IN ACCORDANCE WITH ASTM D 2321-89.
8. ALL MATERIALS SHALL BE INSTALLED IN MAXIMUM 8" LOOSE LIFTS IN ACCORDANCE WITH ASTM D 698. CLASS III AND IV-A MATERIALS SHALL BE COMPACTED NEAR OPTIMUM MOISTURE CONTENT.
9. FILL SALVAGED FROM EXCAVATION SHALL BE FREE OF DEBRIS, ORGANICS AND ROCKS LARGER THAN 3".
10. ALL TRENCH EXCAVATIONS SHALL BE SLOPED, SHORED, SHEETED, BRACED, OR OTHERWISE SUPPORTED IN COMPLIANCE WITH OSHA REGULATIONS AND LOCAL ORDINANCES. (SEE SPECIFICATIONS.)

STORM SEWER TRENCH AND BEDDING
(NOT TO SCALE)

TB
1

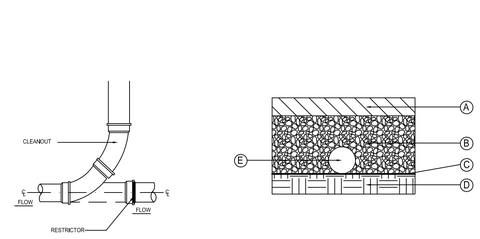

LIGHT DUTY PAVEMENT
STORAGE SECTION

(A) 6" PERMEABLE CONCRETE LAYER
(B) MIN. 24" WASHED, BANK-RUN GRAVEL 1,5 TO 2,5 INCHES IN DIAMETER WITH VOID SPACE OF ABOUT 40%.SEE SHEET C402 FOR STONE DEPTH.
(C) FILTER FABRIC
(D) SUBGRADE, MINIMAL COMPACTION
(E) 6" PERFORATED PIPE

SEE SPECIFICATIONS FOR MATERIAL REQUIREMENTS

PERVIOUS PAVEMENT SECTION
(NOT TO SCALE)

PP
4

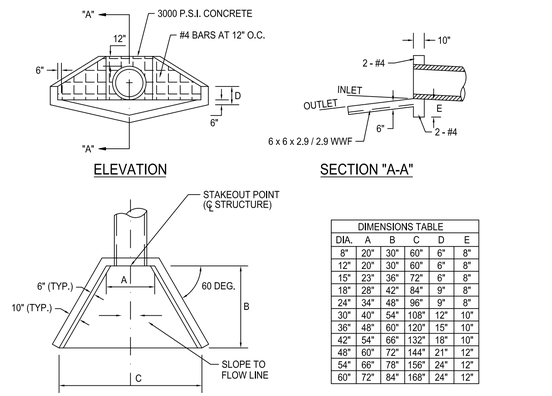

ELEVATION

SECTION "A-A"

DIMENSIONS TABLE					
DIA.	A	B	C	D	E
8"	20"	30"	60"	6"	8"
12"	20"	30"	60"	6"	8"
15"	23"	36"	72"	6"	8"
18"	28"	42"	84"	9"	8"
24"	34"	48"	96"	9"	8"
30"	40"	54"	108"	12"	10"
36"	48"	60"	120"	15"	10"
42"	54"	66"	132"	18"	10"
48"	60"	72"	144"	21"	12"
54"	66"	78"	156"	24"	12"
60"	72"	84"	168"	24"	12"

PLAN

NOTE: ALL EXPOSED EDGES OF CONCRETE SHALL BE CAMFERED ONE INCH.

WINGED ENDWALL/HEADWALL
(NOT TO SCALE)

EW
2

INGRAM CIVIL ENGINEERING, LLC
240 WILSON PIKE CIRCLE, SUITE 200
BRENTWOOD, TN 37027
615.370.7964 OFFICE
615.370.1273 FAX
TENNESSEE LICENSE No.: 104476
CURTIS P. INGRAM JR.

CASE NO.: 2014SP-011-001

ESa Architects
richard l. miller, architect
2100 West End Avenue, Suite 1200
Vanderbilt Plaza
Nashville Tennessee 37203
615-329-9445

This drawing and the design shown is the property of the architect. The reproduction, copying or use of this drawing without their written consent is prohibited and any infringement will be subject to legal action.
© ESa Architects 2010

Seals

AGENCY REVIEW SET

NASHVILLE BALLET EXPANSION AND RENOVATION

3630 REDMON STREET - NASHVILLE, TN

Revisions △

No.	Date	Description

Issue Description
Issue Date 1-21-2013
Project No P1200.24
Drawn By Author | Checked By Checker

Drawing Title

DRAINAGE DETAILS

Sheet Number

C410

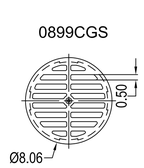

*STANDARD

APPROX. DRAIN AREA = 18,77 SQ. IN.
APPROX. WEIGHT = 3.08 LBS.

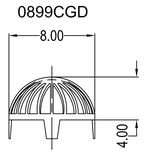

DOMED

APPROX. DRAIN AREA = 30,00 SQ. IN.
APPROX. WEIGHT = 4.54 LBS.

NYLOPLAST 8" GRATES/COVERS

STANDARD GRATE HAS A LIGHT DUTY RATING
SOLID COVER HAS A LIGHT DUTY RATING
DOMED GRATE HAS A LIGHT DUTY RATING
QUALITY: MATERIALS SHALL CONFORM TO ASTM A536 GRADE 70-50-05
MATERIAL: DUCTILE IRON
PAINT: CASTINGS ARE FURNISHED WITH A BLACK PAINT
LOCKING DEVICE AVAILABLE UPON REQUEST FOR STANDARD & SOLID ONLY

* SIZE OF OPENING MEETS REQUIREMENTS OF AMERICAN DISABILITY
ACT AS STATED IN FEDERAL REGISTER PART III, DEPARTMENT OF
JUSTICE, 28 CFR PART 36, NONDISCRIMINATION ON THE BASIS OF
DISABILITY BY PUBLIC ACCOMMODATIONS AND IN COMMERCIAL
FACILITIES; FINAL RULE.

THIS PRINT DISCLOSES SUBJECT MATTER IN WHICH NYLOPLAST HAS PROPRIETARY RIGHTS. THE RECEIPT OR POSSESSION OF THIS PRINT DOES NOT CONFER, TRANSFER, OR LICENSE THE USE OF THE DESIGN OR TECHNICAL INFORMATION SHOWN HEREIN. REPRODUCTION OF THIS PRINT OR ANY INFORMATION CONTAINED HEREIN, OR MANUFACTURE OF ANY ARTICLE HEREFROM, FOR THE DISCLOSURE TO OTHERS IS FORBIDDEN, EXCEPT BY SPECIFIC WRITTEN PERMISSION FROM NYLOPLAST.

DRAWN BY AWA	MATERIAL	Nyloplast	3130 VERONA AVE BUFORD, GA 30518 PHN (770) 932-2443 FAX (770) 932-2490 nyloplastus.com
DATE 15AUG00	DUCTILE IRON		
APPD BY CJA	PROJECT NO./NAME	TITLE	
DATE 15AUG00	GRATE / COVER	8" STANDARD, SOLID & DOME	
DWG SIZE B	SCALE: 6 SHEET 1 OF 1	DWG NO. 7001-110-047	REV B

MEW 9

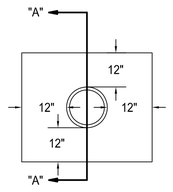

ELEVATION

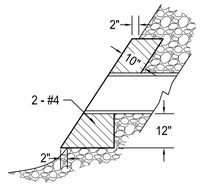

SECTION "A-A"

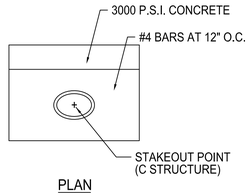

PLAN

NOTE: ALL EXPOSED EDGES OF CONCRETE SHALL BE CAMFERED ONE INCH.

MITRED ENDWALL/HEADWALL
(NOT TO SCALE)

RDA 7

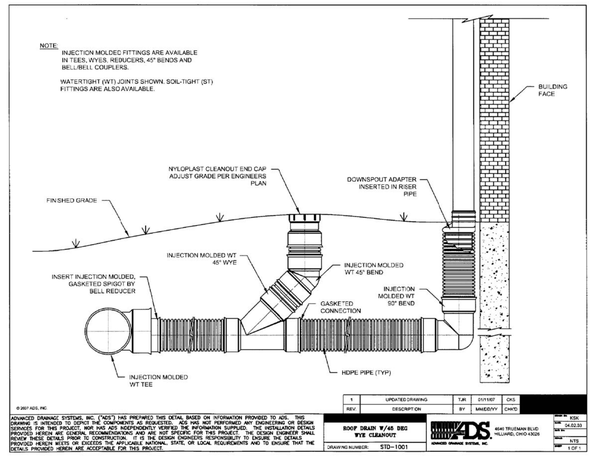

RDA 7

ESa Architects

richard l. miller, architect
2100 West End Avenue, Suite 1200
Vanderbilt Plaza
Nashville Tennessee 37203
615-329-9445

This drawing and the design shown is the property of the architect. The reproduction, copying or use of this drawing without their written consent is prohibited and any infringement will be subject to legal action.

© ESa Architects 2010

Seals

AGENCY REVIEW SET

NASHVILLE BALLET EXPANSION AND RENOVATION

3630 REDMON STREET - NASHVILLE, TN

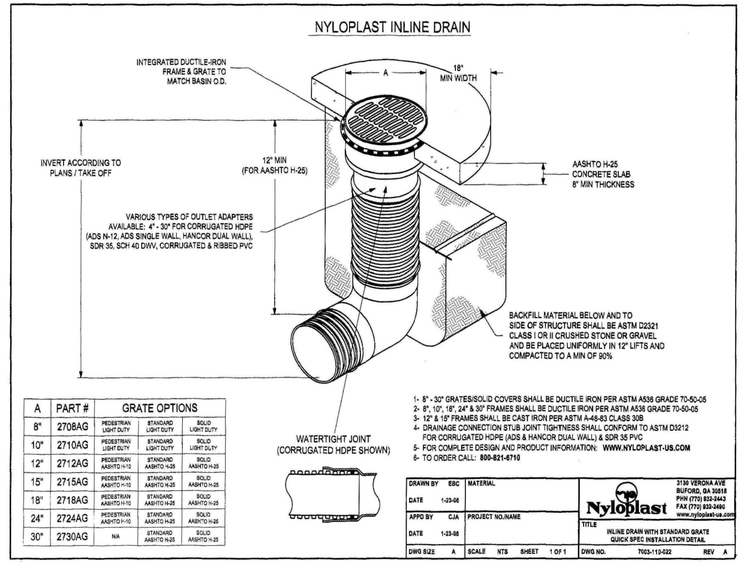

A	PART #	GRATE OPTIONS			
8"	2708AG	PEDESTRIAN LIGHT DUTY	STANDARD LIGHT DUTY	SOLID LIGHT DUTY	
10"	2710AG	PEDESTRIAN LIGHT DUTY	STANDARD LIGHT DUTY	SOLID LIGHT DUTY	
12"	2712AG	PEDESTRIAN AASHTO H-10	STANDARD AASHTO H-25	SOLID AASHTO H-25	
15"	2715AG	PEDESTRIAN AASHTO H-10	STANDARD AASHTO H-25	SOLID AASHTO H-25	
18"	2718AG	PEDESTRIAN AASHTO H-10	STANDARD AASHTO H-25	SOLID AASHTO H-25	
24"	2724AG	PEDESTRIAN AASHTO H-10	STANDARD AASHTO H-25	SOLID AASHTO H-25	
30"	2730AG	N/A	STANDARD AASHTO H-25	SOLID AASHTO H-25	

1- 8" - 30" GRATES/SOLID COVERS SHALL BE DUCTILE IRON PER ASTM A536 GRADE 70-50-05
2- 8", 10", 18", 24" & 30" FRAMES SHALL BE DUCTILE IRON PER ASTM A536 GRADE 70-50-05
3- 12" & 15" FRAMES SHALL BE CAST IRON PER ASTM A-48-83 CLASS 30B
4- DRAINAGE CONNECTION STUB JOINT TIGHTNESS SHALL CONFORM TO ASTM D3212 FOR CORRUGATED HDPE (ADS & HANCOR DUAL WALL) & SDR 35 PVC
5- FOR COMPLETE DESIGN AND PRODUCT INFORMATION: WWW.NYLOPLAST-US.COM
6- TO ORDER CALL: 800-821-6710

DRAWN BY ESC	MATERIAL	Nyloplast	3130 VERONA AVE BUFORD, GA 30518 PHN (770) 932-2443 FAX (770) 932-2490 www.nyloplast-us.com
DATE 1-23-06			
APPD BY CJA	PROJECT NO./NAME	TITLE	
DATE 1-23-06		INLINE DRAIN WITH STANDARD GRATE QUICK SPEC INSTALLATION DETAIL	
DWG SIZE A	SCALE NTS SHEET 1 OF 1	DWG NO.	TQ23-110-022 REV A

ND 6

NOTE 1: CHARACTERISTICS OF BIORETENTION SOIL MIX ARE AS FOLLOWS. THE PLANTING SOIL MUST BE SANDY LOAM, LOAMY SAND OR LOAM TEXTURE PER USDA TEXTURAL TRIANGLE:

a. FERTILE, FRIABLE NATURALLY OCCURRING TOPSOIL, FREE OF STONES, SUBSOIL, CLAY LUMPS, HARDPAN, ROOTS, STUMPS, BRANCHES, STICKS AND OTHER DEBRIS LARGER THAN TWO INCHES IN DIAMETER IN ANY DIMENSION; FREE OF NOXIOUS WEEDS, GRASSES, SEEDS, PLANTS, EXTRANEOUS MATTER AND ANY SUBSTANCE HARMFUL TO PLANT GROWTH.
b. pH 5.5 TO 6.5
c. ORGANIC MATTER 1.5% TO 3%
d. SAND 30% TO 70%
e. SILT LESS THAN 40%
e. CLAY 10% TO 25%

THE SOIL MIX SHOULD HAVE AN INFILTRATION RATE OF AT LEAST 6 INCHES PER DAY. THE CONTRACTOR SHOULD HAVE A SOIL TEST PERFORMED PRIOR TO INSTALLING PLANT MATERIAL TO ENSURE THE MINIMUM INFILTRATION RATE OF 6" PER DAY. THE METRO NASHVILLE STORM WATER INSPECTOR SHOULD BE NOTIFIED BEFORE BIO-RETENTION IS BACKFILLED.

NOTE 2: 100% SHREDDED HARDWOOD OR PINE STRAW.
a. FREE FROM WOOD, WOOD SHAVINGS, CAMBIUM, SAWDUST, LEAVES, TWIGS, INSECTS, GRASSES, WEEDS, PLANTS AND THEIR SEEDS, OTHER FOREIGN MATERIAL AND ANY OTHER SUBSTANCE HARMFUL TO PLANT GROWTH.

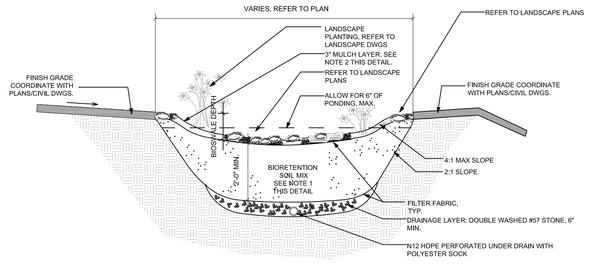

BIO-RETENTION SECTION
(NOT TO SCALE)

BIO 10

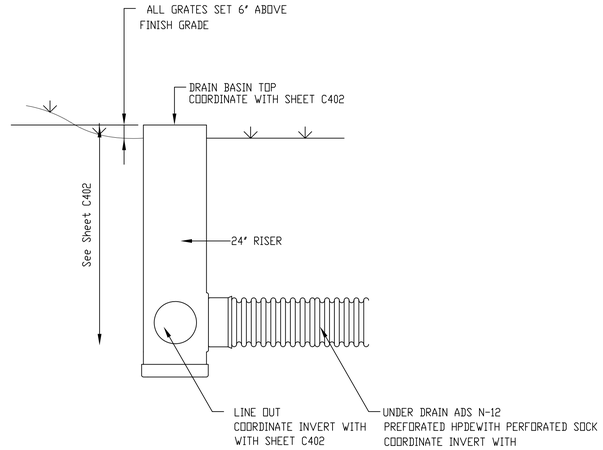

GENERAL NOTES:

1. All Inlets Are To Be 24' diameter nyloplast grated inlet with factory weir installed to top of inlet and a 2' orifice at invert elevation 471.00
2. See Sheet C402 For Drain And Underdrain Pipe Data Chart.

BIO-RETENTION UNDERDRAIN AND OUTLET
(NOT TO SCALE)

OS 8

ICE GROUP
INGRAM CIVIL ENGINEERING, LLC
240 WILSON PIKE CIRCLE, SUITE 200
BRENTWOOD, TN 37027
615.370.7964 OFFICE
615.370.1273 FAX
TENNESSEE LICENSE No.: 104476
CURTIS P. INGRAM JR.

CASE NO.: 2014SP-011-001

Revisions △

No.	Date	Description

Issue Description	
Issue Date	1-21-2013
Project No	P1200.24
Drawn By Author	Checked By Checker

Drawing Title

DRAINAGE DETAILS

Sheet Number

C420

NOTE:
COMMON AREAS WILL BE MAINTAINED
ACCORDING TO THE CONDOMINIUM ASSOCIATION BYLAWS.
MASTER DEED INST. NO. 20010126-0008124

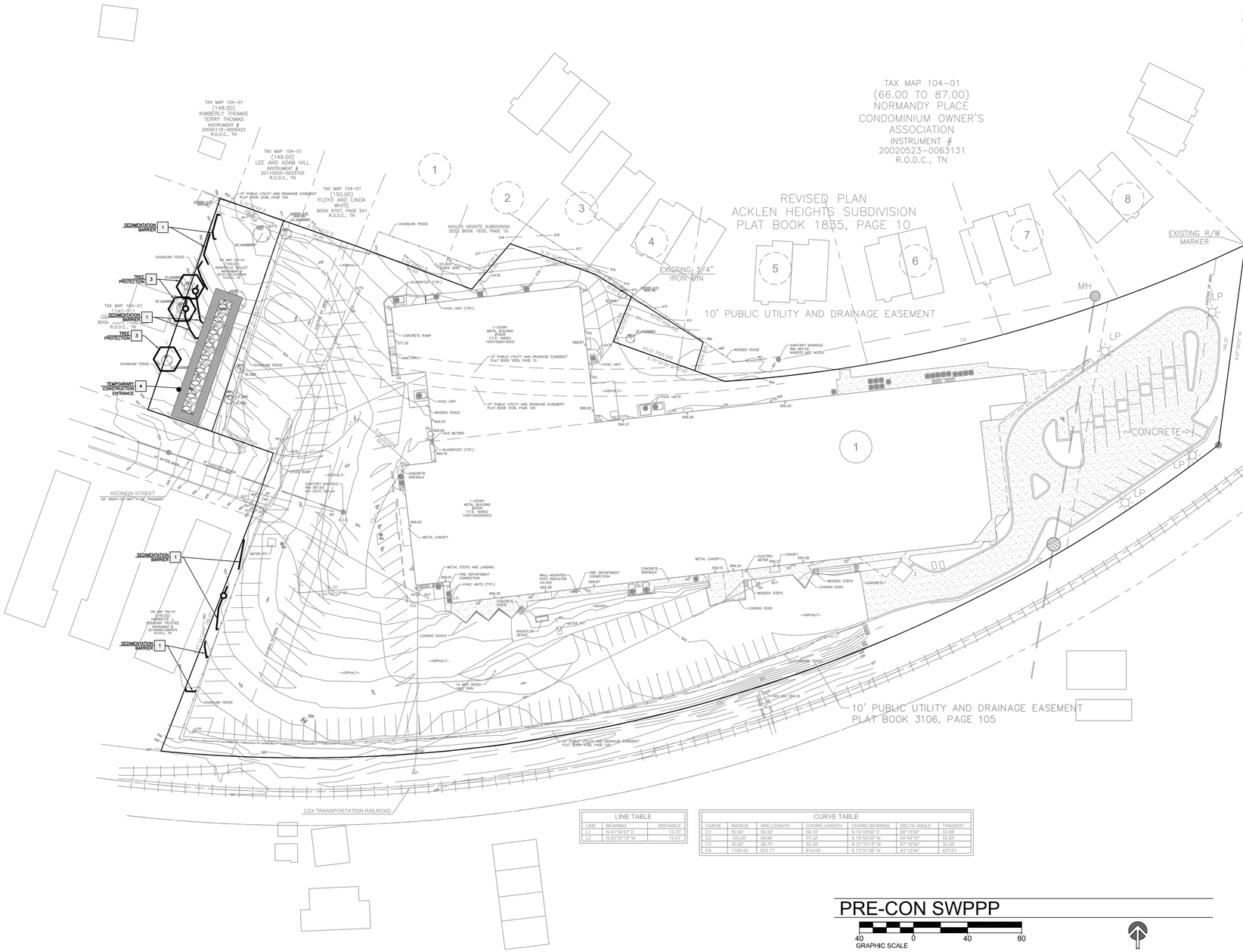

LINE TABLE		
LINE	BEARING	DISTANCE
L1	N 41°54'57" E	13.70'
L2	N 03°55'13" W	12.51'

CURVE TABLE						
CURVE	RADIUS	ARC LENGTH	CHORD LENGTH	CHORD BEARING	DELTA ANGLE	TANGENT
C1	50.00'	59.56'	56.10'	N 74°09'06" E	68°15'00"	33.88'
C2	125.00'	99.96'	97.32'	S 18°58'35" W	45°49'10"	52.83'
C3	50.00'	58.70'	55.39'	N 37°33'15" W	67°16'54"	33.26'
C4	1105.43'	833.71'	814.09'	S 73°51'26" W	43°12'44"	437.81'

PRE-CON SWPPP

GRAPHIC SCALE 40 0 40 80

GENERAL SWPPP NOTES

1. THE INTENT OF EROSION CONTROL MEASURES INDICATED GRAPHICALLY ON PLANS AND DESCRIBED ELSEWHERE IN THE CONTRACT DOCUMENTS IS TO PROVIDE A BARRIER FOR SILT AND SEDIMENT ON THE PROJECT SITE. THIS REPRESENTATION IS PROVIDED FOR THE CONVENIENCE OF THE CONTRACTOR. THE TEST OF EROSION CONTROL EFFECTIVENESS IS NOT TO BE DETERMINED BY ADHERENCE TO THE REPRESENTATION SET FORTH ON THE DRAWINGS AND SPECIFICATIONS, BUT BY MEETING THE REGULATIONS SET FORTH BY THE AUTHORITY HAVING JURISDICTION OVER WATER QUALITY CONTROL AND OTHER SEDIMENTATION RESTRICTION REQUIREMENTS IN THE REGION OF THE PROPOSED PROJECT.

2. APPROVED EROSION AND SEDIMENT CONTROL MEASURES SHALL BE INSTALLED PRIOR TO ANY CLEARING, GRADING, EXCAVATION, FILLING OR OTHER LAND DISTURBANCE ACTIVITIES, EXCEPT THOSE OPERATIONS NEEDED TO INSTALL SUCH MEASURES.

3. KEEP DUST WITHIN TOLERABLE LIMITS BY SPRINKLING OR OTHER ACCEPTABLE MEANS.

4. ADDITIONAL EROSION AND SEDIMENT CONTROL MEASURES WILL BE INSTALLED IF DEEMED NECESSARY BY ONSITE INSPECTION. ALL DIMENSIONS AND LOCATIONS OF EROSION CONTROL MEASURES SHALL BE SUBJECT TO ADJUSTMENT AS DEEMED NECESSARY BY ON-SITE INSPECTION.

5. FAILURE TO PROPERLY INSTALL AND MAINTAIN EROSION CONTROL PRACTICES SHALL RESULT IN CONSTRUCTION BEING HALTED.

6. DRAINAGE INLETS SHALL BE PROTECTED BY STRAW BALE INLET SEDIMENT FILTER.

7. ANY ACCESS ROUTES TO THE SITE SHALL BE BASED WITH CRUSHED STONE.

8. EROSION CONTROL MEASURES ARE TO BE MAINTAINED UNTIL PERMANENT GROUND COVER IS ESTABLISHED.

9. WHENEVER FEASIBLE, NATURAL VEGETATION SHALL BE RETAINED AND PROTECTED. NO TREES ARE TO BE REMOVED AND/OR VEGETATION DISTURBED EXCEPT AS NECESSARY FOR GRADING PURPOSES.

10. ALL WORK IS TO BE IN COMPLIANCE WITH THE RULES AND REGULATIONS SET FORTH BY THE STATE OF TENNESSEE, DEPARTMENT OF ENVIRONMENT AND CONSERVATION OR OTHER JURISDICTION REQUIREMENTS.

11. THE CONTRACTOR SHALL AT NO TIME USE ANY SINK HOLE AS MATERIAL STORAGE OR DISPOSAL.

PRE-CON SWPPP NOTES

A -

SWPPP DETAILS

1 SEDIMENTATION BARRIER
2 RIP-RAP
3 TREE PROTECTION
4 TEMPORARY CONSTRUCTION ENTRANCE
5 INLET PROTECTION

LEGEND: PRE-CON SWPPP

TREE PROTECTION
SEDIMENTATION BARRIER
TEMPORARY CONSTRUCTION ENTRANCE

CASE NO.: 2014SP-011-001

ESa Architects
richard l. miller, architect
2100 West End Avenue, Suite 1200
Vanderbilt Plaza
Nashville Tennessee 37203
615-329-9445

This drawing and the design shown is the property of the architect. The reproduction, copying or use of this drawing without their written consent is prohibited and any infringement will be subject to legal action.
© ESa Architects 2010

Seals

COURTIS P. INGRAM, JR. REGISTERED ENGINEER AGREEMENT NUMBER 104476 STATE OF TENNESSEE 1-21-13

AGENCY REVIEW SET

NASHVILLE BALLET EXPANSION AND RENOVATION

3630 REDMON STREET - NASHVILLE, TN

Revisions

No.	Date	Description

Issue Description

Issue Date	1-21-2013
Project No	P1200.24
Drawn By Author	Checked By Checker

Drawing Title

PRE-CON STORM WATER POLLUTION PREVENTION PLAN

Sheet Number

C500

INGRAM CIVIL ENGINEERING, LLC
240 WILSON PIKE CIRCLE, SUITE 200
BRENTWOOD, TN 37027
615.370.7964 OFFICE
615.370.1273 FAX
TENNESSEE LICENSE No.: 104476
CURTIS P. INGRAM JR.

NOTE:
COMMON AREAS WILL BE MAINTAINED
ACCORDING TO THE CONDOMINIUM ASSOCIATION BYLAWS.
MASTER DEED INST. NO. 20010126-0008124

SWPPP NOTES

A -

SWPPP DETAILS

1	SEDIMENTATION BARRIER
2	RIP-RAP
3	TREE PROTECTION
4	TEMPORARY CONSTRUCTION ENTRANCE
5	INLET PROTECTION

GENERAL SWPPP NOTES

1. THE INTENT OF EROSION CONTROL MEASURES INDICATED GRAPHICALLY ON PLANS AND DESCRIBED ELSEWHERE IN THE CONTRACT DOCUMENTS IS TO PROVIDE A BARRIER FOR SILT AND SEDIMENT ON THE PROJECT SITE. THIS REPRESENTATION IS PROVIDED FOR THE CONVENIENCE OF THE CONTRACTOR. THE TEST OF EROSION CONTROL EFFECTIVENESS IS NOT TO BE DETERMINED BY ADHERENCE TO THE REPRESENTATION SET FORTH ON THE DRAWINGS AND SPECIFICATIONS, BUT BY MEETING THE REGULATIONS SET FORTH BY THE AUTHORITY HAVING JURISDICTION OVER WATER QUALITY CONTROL AND OTHER SEDIMENTATION RESTRICTION REQUIREMENTS IN THE REGION OF THE PROPOSED PROJECT.

2. APPROVED EROSION AND SEDIMENT CONTROL MEASURES SHALL BE INSTALLED PRIOR TO ANY CLEARING, GRADING, EXCAVATION, FILLING OR OTHER LAND DISTURBANCE ACTIVITIES, EXCEPT THOSE OPERATIONS NEEDED TO INSTALL SUCH MEASURES.

3. KEEP DUST WITHIN TOLERABLE LIMITS BY SPRINKLING OR OTHER ACCEPTABLE MEANS.

4. ADDITIONAL EROSION AND SEDIMENT CONTROL MEASURES WILL BE INSTALLED IF DEEMED NECESSARY BY ONSITE INSPECTION. ALL DIMENSIONS AND LOCATIONS OF EROSION CONTROL MEASURES SHALL BE SUBJECT TO ADJUSTMENT AS DEEMED NECESSARY BY ON-SITE INSPECTION.

5. FAILURE TO PROPERLY INSTALL AND MAINTAIN EROSION CONTROL PRACTICES SHALL RESULT IN CONSTRUCTION BEING HALTED.

6. DRAINAGE INLETS SHALL BE PROTECTED BY STRAW BALE INLET SEDIMENT FILTER.

7. ANY ACCESS ROUTES TO THE SITE SHALL BE BASED WITH CRUSHED STONE.

8. EROSION CONTROL MEASURES ARE TO BE MAINTAINED UNTIL PERMANENT GROUND COVER IS ESTABLISHED.

9. WHENEVER FEASIBLE, NATURAL VEGETATION SHALL BE RETAINED AND PROTECTED. NO TREES ARE TO BE REMOVED AND/OR VEGETATION DISTURBED EXCEPT AS NECESSARY FOR GRADING PURPOSES.

10. ALL WORK IS TO BE IN COMPLIANCE WITH THE RULES AND REGULATIONS SET FORTH BY THE STATE OF TENNESSEE, DEPARTMENT OF ENVIRONMENT AND CONSERVATION OR OTHER JURISDICTION REQUIREMENTS.

11. THE CONTRACTOR SHALL AT NO TIME USE ANY SINK HOLE AS MATERIAL STORAGE OR DISPOSAL.

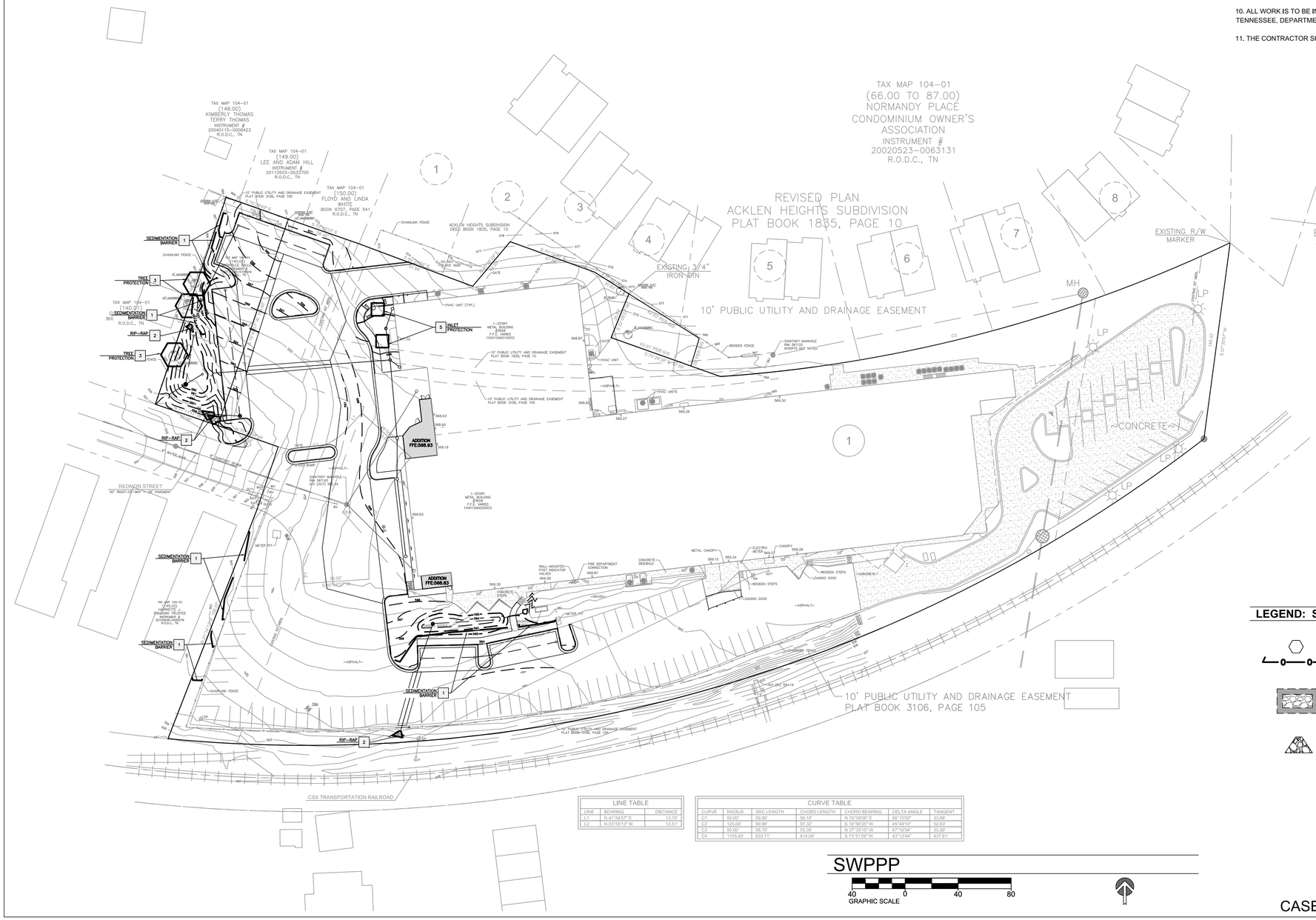

LINE TABLE		
LINE	BEARING	DISTANCE
L1	N 41°54'57" E	13.70'
L2	N 03°55'13" W	12.51'

CURVE TABLE						
CURVE	RADIUS	ARC LENGTH	CHORD LENGTH	CHORD BEARING	DELTA ANGLE	TANGENT
C1	50.00'	59.56'	56.10'	N 74°09'06" E	68°15'00"	33.88'
C2	125.00'	99.96'	97.32'	S 18°58'35" W	45°49'10"	52.83'
C3	50.00'	58.70'	55.39'	N 37°33'15" W	67°16'04"	33.26'
C4	1105.43'	833.71'	814.09'	S 73°51'26" W	43°12'44"	437.81'

SWPPP

40 0 40 80
GRAPHIC SCALE

LEGEND: SWPPP

- TREE PROTECTION
- SEDIMENTATION BARRIER
- TEMPORARY CONSTRUCTION ENTRANCE
- RIP-RAP OUTLET PROTECTION

CASE NO.: 2014SP-011-001

ICE GROUP
INGRAM CIVIL ENGINEERING, LLC
240 WILSON PIKE CIRCLE, SUITE 200
BRENTWOOD, TN 37027
615.370.7964 OFFICE
615.370.1273 FAX
TENNESSEE LICENSE No.: 104476
CURTIS P. INGRAM JR.

ESa Architects
richard l. miller, architect
2100 West End Avenue, Suite 1200
Vanderbilt Plaza
Nashville Tennessee 37203
615-329-9445

This drawing and the design shown is the property of the architect. The reproduction, copying or use of this drawing without their written consent is prohibited and any infringement will be subject to legal action.
© ESa Architects 2010

Seals

AGENCY REVIEW SET

NASHVILLE BALLET EXPANSION AND RENOVATION

3630 REDMON STREET - NASHVILLE, TN

Revisions

No.	Date	Description

Issue Description	
Issue Date	1-21-2013
Project No	P1200.24
Drawn By Author	Checked By Checker

Drawing Title

STORM WATER POLLUTION PREVENTION PLAN

Sheet Number
C501

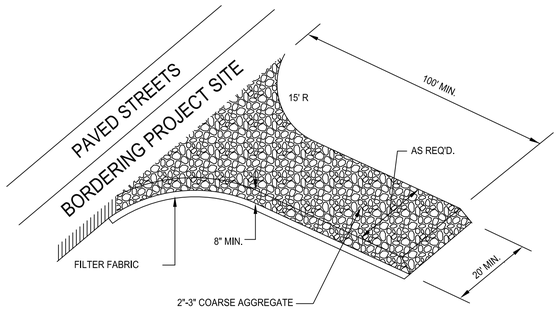

NOTE:
GRAVEL PAD IS REQUIRED TO PROVIDE BUFFER AREA WHERE VEHICLES CAN DROP THEIR MUD AND SEDIMENT TO AVOID TRANSPORTING IT ONTO PAVED STREETS, TO CONTROL EROSION FROM SURFACE RUNOFF, AND TO HELP CONTROL DUST. FILTER FABRIC IS TO MEET THE REQUIREMENTS OF TCP-03 & TCP-13 OF THE STORMWATER MANAGEMENT MANUAL, VOL. 4.

REFER TO TCP-03 OF THE METRO STORMWATER MANAGEMENT MANUAL, VOL. 4

TEMPORARY CONSTRUCTION ENTRANCE
(NOT TO SCALE)

4

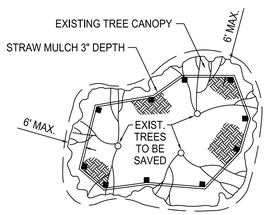

PLAN - TYPICAL FENCE

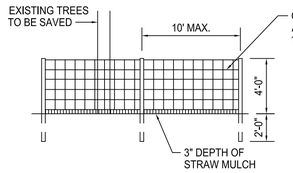

ELEVATION - TYPICAL FENCE

NOTES:
1. REMOVE ALL EXISTING CONCRETE OR ASPHALT PAVING WITH THE LIMITS OF THE BARRICADED AREA, IF REMOVAL CREATES A POTENTIAL WATER POCKET, IT SHALL BE FILLED TO PROVIDE POSITIVE DRAINAGE.
2. REMOVE ALL VINES FROM TREES IN BARRICADED AREA.
3. REMOVE DEAD OR DAMAGED LIMBS AND PAINT ALL WOUNDS WITH TREE WOUND PAINT.
4. NO BARRICADE SHALL BE PLACED MORE THAN 6' INSIDE CANOPY OF EXISTING TREES.
5. PROTECT ALL TREES TO BE SAVED FROM EXCAVATION FOR UNDERGROUND UTILITIES, INCLUDING BUT NOT LIMITED TO ELECTRIC, TELEPHONE, GAS, SEWER AND WATER LINES.
6. NO EXCAVATION SHALL TAKE PLACE WITHIN THE CANOPY LINE OF EXISTING TREES TO BE SAVED. PAINT ALL CUT ROOTS (1 1/2" DIA. AND LARGER) WITH ASPHALT BASE TREE WOUND PAINT.
7. SEE SPECIFICATIONS FOR DEFINITION OF TREE PROTECTION ZONE

ORANGE COPOLYMER MESH CONSTRUCTION AREA FENCE WITH OPENINGS APPROXIMATELY 1.3" X 1.3" AND NORMAL POROSITY OF 75%.

TREE PROTECTION
(NOT TO SCALE)

3

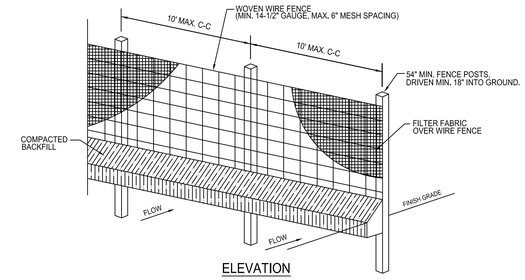

ELEVATION

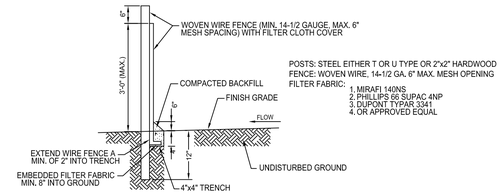

POSTS: STEEL EITHER T OR U TYPE OR 2"x2" HARDWOOD
FENCE: WOVEN WIRE, 14-1/2 GA. 6" MAX. MESH OPENING
FILTER FABRIC:
1. MIRAFI 140NS
2. PHILLIPS 66 SUPAC 4NP
3. DUPONT TYPAR 3341
4. OR APPROVED EQUAL

CROSS-SECTION

1. WOVEN WIRE FENCE TO BE FASTENED SECURELY TO FENCE POSTS WITH WIRE TIES OR STAPLES.
2. FILTER CLOTH TO BE FASTENED SECURELY TO WOVEN WIRE FENCE WITH TIES SPACED EVERY 24" AT TOP AND MID SECTION.
3. WHEN TWO SECTIONS OF FILTER CLOTH ADJOIN EACH OTHER THEY SHALL BE OVERLAPPED BY SIX INCHES AND FOLDED.
4. MAINTENANCE SHALL BE PERFORMED AS NOTED IN THE EROSION CONTROL PLAN. COLLECTED MATERIAL SHALL BE REMOVED WHEN "BULGES" DEVELOP IN THE SILT FENCE.

SEDIMENTATION BARRIER/ SILT FENCE
(NOT TO SCALE)

1

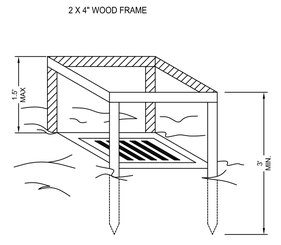

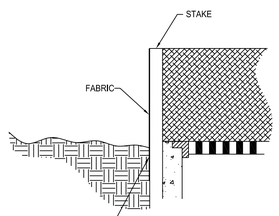

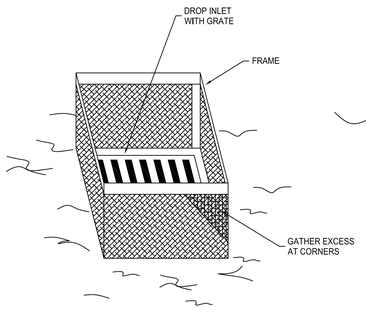

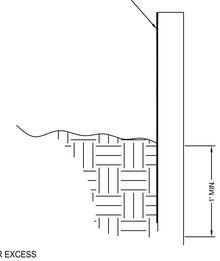

Definition
A temporary fabric barrier placed around a drop inlet.
Purpose
To help prevent sediment from entering storm drains during construction operations. This practice allows early use of the storm drain system.

Conditions
Where storm drain inlets are to be made operational before permanent stabilization of the disturbed drainage area. This method of inlet protection is effective where the inlet drains a small, nearly level area with slopes generally less than 5% and where shallow sheet flows are expected. The immediate land area around the inlet should be relatively flat (less than 1 %) and located so that accumulated sediment can be easily removed. This practice must not be used near the edge of fill material and must not divert water over cut or nil slopes.

Design Criteria
Ensure that drainage areas do not exceed 1 acre per Inlet.
Keep the maximum height of fabric above the crest of the drop inlet at 1.5 ft. This height allows a shallow temporary desilting pool to form behind the fabric but limits the pressure against the fabric if overtopping occurs. The selected height of the top of the barrier should allow overflow into the drop inlet and not let overflow bypass the inlet to unprotected lower areas.
For fabric barriers, use stakes with a minimum length of 3 ft, and space them a maximum of 3 ft apart, and securely drive them into the ground. Drive the stakes close to the drop inlet so that overflow will fall directly into the structure and not on unprotected soil.
To attach the fabric, make a frame around the stakes a maximum of 1.5 ft above the top of the drop inlet. This will serve as a stable crest for overflow during rainfall.
Ensure that both fabric and supporting stakes are sufficiently strong to hold a 1.5 ft head of water without failure.

Construction Specifications
1. As synthetic fabric, use a pervious sheet of nylon, polyester, or ethylene yam-extra strength (50 lb/1 inch minimum)-that contains ultraviolet ray inhibitors and stabilizers. Fabric should be sufficiently porous to provide adequate drainage of the temporary sediment pool. Burlap may be used for short-term applications. It must be replaced every 60 days.
2. Cut fabric from a continuous roll to eliminate joints.
3. For stakes, use 2 x 4-inch wood (preferred) **or** equivalent metal with a minimum length of 3 ft.
4. Space stakes evenly around the perimeter of the inlet a maximum of 3 ft apart, and securely drive them into the ground, approximately 18 inches deep.
5. To provide needed stability to the installation, frame with 2 x 4-inch wood strips around the crest of the overflow area at a maximum of 1.5 ft above the drop inlet crest.
6. Place the bottom 12 inches of the fabric in a trench and backfill the trench with at least 4 inches of crushed stone or 12 inches of compacted soil.
7. Fasten fabric securely to the stakes and frame. Joints must be overlapped to the next stake.
8. The top of the frame and fabric must be well below the ground elevation downslope from the drop inlet to keep runoff from bypassing the inlet. It may be necessary to build a temporary dike on the down slope side of the structure to prevent bypass flow. Material from within the sediment pool may be used for diking.

Maintenance
Inspect the fabric barrier after each rain and make repairs as needed.
Remove sediment from the pool area as necessary to provide adequate storage volume for the next rain. Take care not to damage or undercut the fabric during sediment removal.
When the contributing drainage area has been adequately stabilized, remove all materials and any unstable sediment and dispose of them properly. Bring the disturbed area to the grade of the drop inlet and smooth and compact it. Appropriately stabilize all bare areas around the inlet.

References
Inlet Protection
6.50, Excavated Drop Inlet Protection (Temporary) 6.52, Block and Gravel Inlet Protection (Temporary)

COORDINATE WITH NCDENR - EROSION AND SEDIMENT CONTROL PLANNING AND DESIGN MANUAL, SECTION 6.06

FABRIC DROP INLET PROTECTION
(NOT TO SCALE)

5

DRAINAGE STRUCTURE: IN SOME INSTANCES THIS STRUCTURE MAY BE A PIPE, END SECTION, SPLASH PAD OR CURB CUT. (SEE PLAN)
SEE PLAN FOR LENGTH (L) AND WIDTH (W) OF RIP-RAP STABILIZATION AT CURB CUTS.

RIP-RAP STABILIZATION TO BE HAND PLACED NATIVE STONE UNDERLAIN BY NON-WOVEN GEOTEXTILE FABRIC. SEE PLAN FOR LENGTH AND D50.

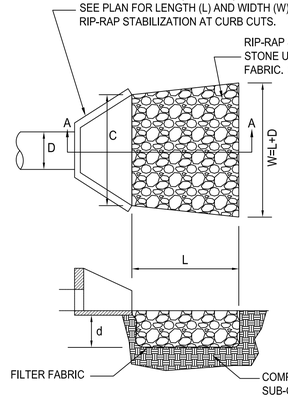

APRON LINING TO BE FILTER FABRIC, MIRAFI 500X OR EQUIVALENT.

L=LENGTH OF RIP-RAP
D=OUTLET PIPE DIAMETER
C=MATCH WIDTH OF HEADWALL
d=DEPTH OF STONE, 1.5 TIMES MAXIMUM STONE DIAMETER BUT NOT LESS THAN 6"

RIP-RAP OUTLET PROTECTION
(NOT TO SCALE)

2

CASE NO.: 2014SP-011-001

ICE GROUP
INGRAM CIVIL ENGINEERING, LLC
240 WILSON PIKE CIRCLE, SUITE 200
BRENTWOOD, TN 37027
615.370.7964 OFFICE
615.370.1273 FAX
TENNESSEE LICENSE No.: 104476
CURTIS P. INGRAM JR.

ESa
ESa Architects
richard l. miller, architect
2100 West End Avenue, Suite 1200
Vanderbilt Plaza
Nashville Tennessee 37203
615-329-9445

This drawing and the design shown is the property of the architect. The reproduction, copying or use of this drawing without their written consent is prohibited and any infringement will be subject to legal action.
© ESa Architects 2010

Seals

AGENCY REVIEW SET

NASHVILLE BALLET EXPANSION AND RENOVATION

3630 REDMON STREET - NASHVILLE, TN

Revisions

No.	Date	Description

Issue Description	
Issue Date	1-21-2013
Project No	P1200.24
Drawn By	Author
Checked By	Checker

Drawing Title

SWPPP DETAILS

Sheet Number

C510

NOTE:
COMMON AREAS WILL BE MAINTAINED
ACCORDING TO THE CONDOMINIUM ASSOCIATION BYLAWS.
MASTER DEED INST. NO. 20010126-0008124

PIPE NUMBER
DETAIL CALLOUT

PIPE SCHEDULE

PIPE	LENGTH (FT.)	SIZE (IN.)	TYPE	SLOPE (%)	Q,cap. (cfs)	Q,10yr (cfs)
P1	100	6	SDR-35	3.54	-	-
P2	71	6	SDR-35	4.07		

STRUCTURE TYPE AND NUMBER
DETAIL CALLOUT

SANITARY STRUCTURES

STRUCTURE	RIM ELEV.	INVERT ELEV.	TYPE	NOTE
CO1	568.80	564.98	-	-
CO2	568.12	564.33		

*NOTE:
CO CLEAN OUT

UTILITY NOTES

A SEE PLUMBING FOR CONTINUATION INTO BUILDING.

B ADJUST CLEANOUT AND SANITARY SEWER MANHOLE TO BE FLUSH WITH ASPHALT SURFACE.

C CONFIRM THESES WATER UTILITY STRUCTURES ARE TRAFFIC RATED AND SUITABLE TO REMAIN IN PAVED AREA.

UTILITY DETAILS

1 EXTERIOR CLEANOUT

2 UTILITY TRENCH & BEDDING

GENERAL UTILITY NOTES

1. UNLESS OTHERWISE NOTED, ALL WATER LINES SHALL BE PVC WITH 3' MIN. COVER.

2. UNLESS OTHERWISE NOTED, ALL SANITARY SEWER LINES SHALL BE PVC WITH 4' MIN. COVER.

3. CONTRACTOR SHALL COORDINATE ANY DISRUPTIONS TO EXISTING UTILITY SERVICES WITH ADJACENT PROPERTY OWNERS.

4. ALL ELECTRICAL, TELEPHONE AND GAS EXTENSIONS, INCLUDING SERVICE LINES, SHALL BE CONSTRUCTED TO THE APPROPRIATE UTILITY COMPANY SPECIFICATIONS. ALL UTILITY DISCONNECTIONS SHALL BE COORDINATED WITH THE DESIGNATED UTILITY COMPANIES.

5. CONSTRUCTION SHALL NOT START ON ANY PUBLIC UTILITY SYSTEM UNTIL WRITTEN APPROVAL HAS BEEN RECEIVED BY THE ENGINEER FROM THE APPROPRIATE GOVERNING AUTHORITY AND THE CONTRACTOR HAS BEEN NOTIFIED BY THE ENGINEER.

6. PRIOR TO THE CONSTRUCTION OF ANY CONNECTION TO ANY STORM DRAIN, SANITARY SEWER, WATER MAIN AND/OR ANY DRY UTILITIES, THE CONTRACTOR SHALL EXCAVATE, VERIFY AND CALCULATE ALL POINTS OF CONNECTION AND ALL UTILITY CROSSINGS AND INFORM THE ENGINEER AND THE OWNER/DEVELOPER OF ANY CONFLICT OR REQUIRED DEVIATION FROM THE PLAN. NOTIFICATION SHALL BE MADE A MINIMUM OF 48 HOURS PRIOR TO CONSTRUCTION. THE ENGINEER AND ITS CLIENTS SHALL BE HELD HARMLESS IN THE EVENT THAT THE CONTRACTOR FAILS TO MAKE SUCH NOTIFICATION.

7. UNLESS OTHERWISE SHOWN, CALLED OUT OR SPECIFIED HEREON OR WITHIN SPECIFICATIONS:
ALL WATER LINE FITTINGS SHALL BE INSTALLED WITH THRUST BLOCKING (SEE UTILITY DETAILS, THESE PLANS). ALL WATER LINE PIPE BEDDING SHALL BE INSTALLED PER DETAIL (SEE UTILITY DETAILS, THESE PLANS). ALL SANITARY SEWER PIPE BEDDING SHALL BE INSTALLED PER DETAIL (SEE UTILITY DETAILS, THESE PLANS).

8. PRIVATE SEWER LINES MUST BE INSTALLED BY A LICENSED PLUMBER AND MUST BE INSTALLED IN ACCORDANCE WITH THE PLUMBING CODE OF THE GOVERNING AUTHORITY.

9. THE CONTRACTOR SHALL GIVE ALL NECESSARY NOTICES, OBTAIN ALL PERMITS, AND PAY ALL PERMIT FEES. THE CONTRACTOR SHALL CONFORM TO ALL STATE AND LOCAL CODES AND ORDINANCES AND RECEIVE APPROPRIATE APPROVALS WHERE REQUIRED PRIOR TO COMMENCEMENT OF THE WORK.

10. SEE MP&E PLANS FOR CONTINUATION OF UTILITIES INTO BUILDINGS. THE CONTRACTOR SHALL COORDINATE THE LOCATIONS OF THE CONNECTIONS OF THE SITE UTILITIES WITH THE BUILDING UTILITIES.

11. ADJUST ALL CASTINGS TO MATCH FINISH GRADES.

12. NOTE TO SPRINKLER CONTRACTOR:
THE FOLLOWING FLOW AND PRESSURE DATA HAS BEEN CALCULATED BY THE CITY OF NASHVILLE, TN. FIRE DEPT. ON X-X-X.

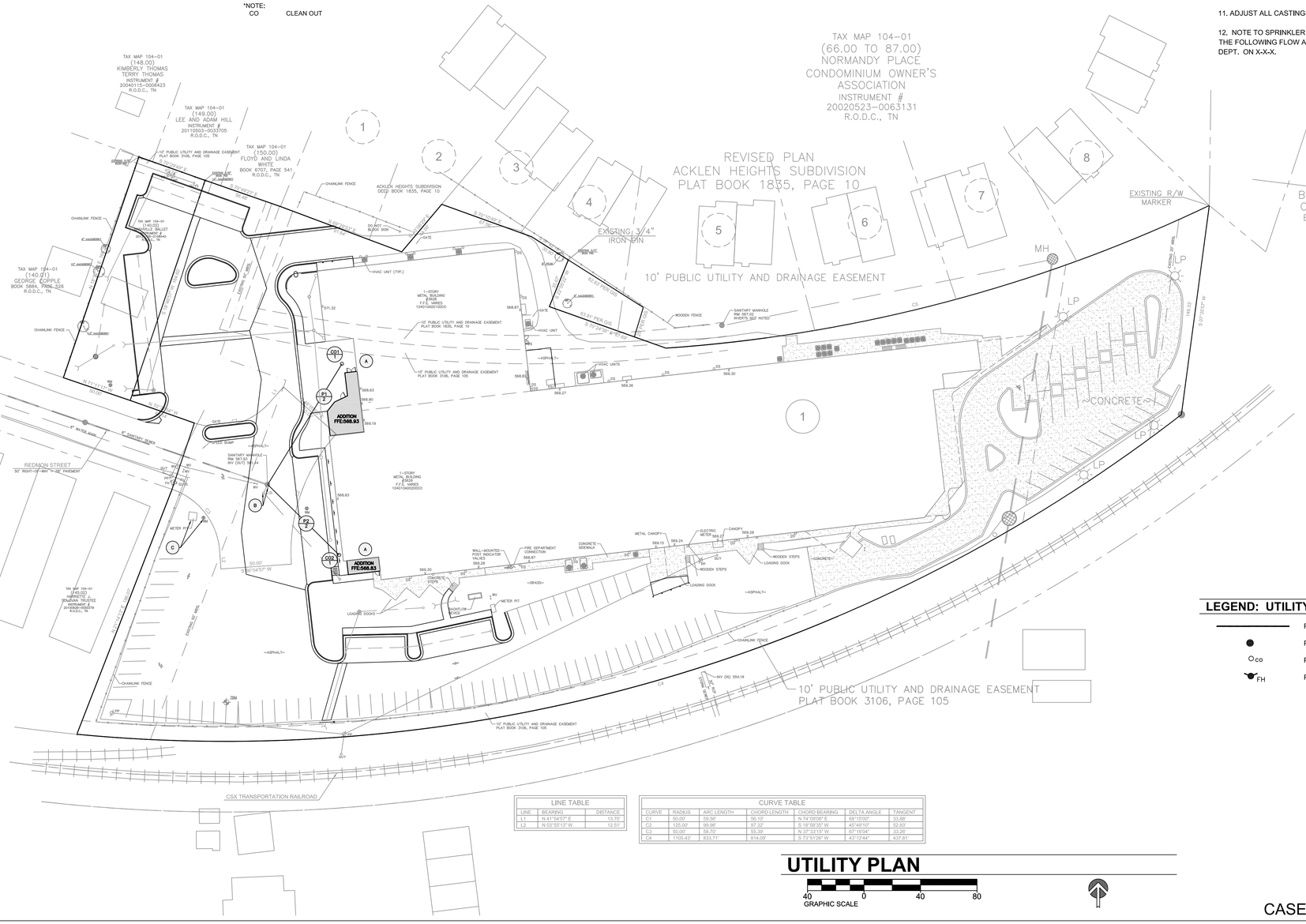

LINE TABLE

LINE	BEARING	DISTANCE
L1	N 41°54'57" E	13.39'
L2	N 03°50'13" W	12.01'

CURVE TABLE

CURVE	RADIUS	ARC LENGTH	CHORD LENGTH	CHORD BEARING	DELTA ANGLE	TANGENT
C1	50.00'	59.56'	56.10'	N 74°09'08" E	68°16'00"	33.88'
C2	125.00'	99.96'	97.32'	S 18°58'35" W	45°49'10"	52.83'
C3	50.00'	58.70'	55.39'	N 37°33'15" W	67°16'04"	33.26'
C4	1105.43'	833.71'	814.09'	S 73°51'26" W	43°12'44"	437.81'

LEGEND: UTILITY

- PROPOSED SANITARY SEWER LINE
- PROPOSED MANHOLE
- CO PROPOSED CLEANOUT
- FH PROPOSED FIRE HYDRANT

UTILITY PLAN

GRAPHIC SCALE 40 0 40 80

CASE NO.: 2014SP-011-001

ESa Architects
richard l. miller, architect
2100 West End Avenue, Suite 1200
Vanderbilt Plaza
Nashville Tennessee 37203
615-329-9445

This drawing and the design shown is the property of the architect. The reproduction, copying or use of this drawing without their written consent is prohibited and any infringement will be subject to legal action.
© ESa Architects 2010

Seals

AGENCY REVIEW SET

NASHVILLE BALLET EXPANSION AND RENOVATION

3630 REDMON STREET - NASHVILLE, TN

Revisions

No.	Date	Description

Issue Description
Issue Date 1-21-2013
Project No P1200.24
Drawn By Author | Checked By Checker

Drawing Title

UTILITY PLAN

Sheet Number
C600

INGRAM CIVIL ENGINEERING, LLC
240 WILSON PIKE CIRCLE, SUITE 200
BRENTWOOD, TN 37027
615.370.7964 OFFICE
615.370.1273 FAX
TENNESSEE LICENSE No.: 104476
CURTIS P. INGRAM JR.

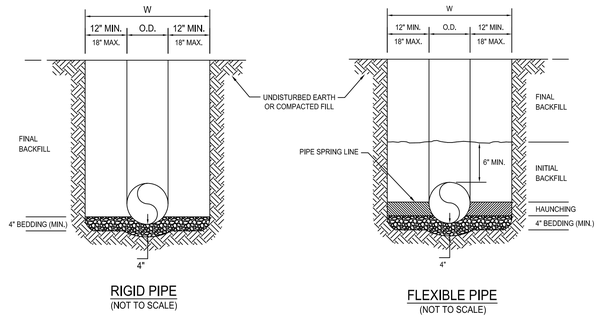

RIGID PIPE
(NOT TO SCALE)

FLEXIBLE PIPE
(NOT TO SCALE)

GENERAL NOTES:

1. BEDDING SHALL BE CLASS I-A WORKED BY HAND. IF GROUNDWATER IS ANTICIPATED, THEN BEDDING SHALL BE CLASS I-B COMPACTED TO 85% STANDARD PROCTOR. (SEE SPECIFICATIONS FOR GRADATION.)
2. HAUNCHING SHALL BE WORKED AROUND THE PIPE BY HAND TO ELIMINATE VOIDS AND SHALL BE CLASS I-A OR CLASS I-B OR CLASS II COMPACTED TO 85% PROCTOR.
3. INITIAL BACKFILL SHALL BE CLASS I-A WORKED BY HAND, OR CLASS I-B OR CLASS II COMPACTED TO 85% STANDARD PROCTOR.
4. INITIAL BACKFILL NOT UNDER PAVED AREAS CAN BE CLASS III COMPACTED TO 90% STANDARD PROCTOR.
5. FINAL BACKFILL SHALL BE CLASS I, II, OR III COMPACTED AS NOTED IN NOTES 3 AND 4.
6. FINAL BACKFILL NOT UNDER PAVED AREAS CAN BE CLASS IV-A COMPACTED TO 95% STANDARD PROCTOR.
7. ALL MATERIALS ARE CLASSIFIED IN ACCORDANCE WITH ASTM D 2321-89.
8. ALL MATERIALS SHALL BE INSTALLED IN MAXIMUM 8" LOOSE LIFTS IN ACCORDANCE WITH ASTM D 698. CLASS III AND IV-A MATERIALS SHALL BE COMPACTED NEAR OPTIMUM MOISTURE CONTENT.
9. FILL SALVAGED FROM EXCAVATION SHALL BE FREE OF DEBRIS. ORGANICS AND ROCKS LARGER THAN 3".
10. ALL TRENCH EXCAVATIONS SHALL BE SLOPED, SHORED, SHEETED, BRACED, OR OTHERWISE SUPPORTED IN COMPLIANCE WITH OSHA REGULATIONS AND LOCAL ORDINANCES. (SEE SPECIFICATIONS.)

UTILITY TRENCH AND BEDDING
(NOT TO SCALE)

TB
2

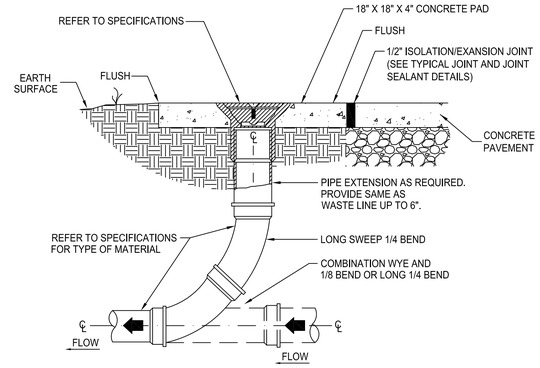

EXTERIOR CLEANOUT
(NOT TO SCALE)

CO
1

ESa Architects

richard l. miller, architect
2100 West End Avenue, Suite 1200
Vanderbilt Plaza
Nashville Tennessee 37203
615-329-9445

This drawing and the design shown is the property of the architect. The reproduction, copying or use of this drawing without their written consent is prohibited and any infringement will be subject to legal action.

© ESa Architects 2010

Seals

AGENCY REVIEW SET

NASHVILLE BALLET EXPANSION AND RENOVATION

3630 REDMON STREET - NASHVILLE, TN

Revisions △

No.	Date	Description

Issue Description

Issue Date	1-21-2013
Project No	P1200.24
Drawn By: Author	Checked By: Checker

Drawing Title

UTILITY DETAILS

Sheet Number

C610

INGRAM CIVIL ENGINEERING, LLC
240 WILSON PIKE CIRCLE, SUITE 200
BRENTWOOD, TN 37027
615.370.7964 OFFICE
615.370.1273 FAX
TENNESSEE LICENSE No.: 104476
CURTIS P. INGRAM JR.

CASE NO.: 2014SP-011-001

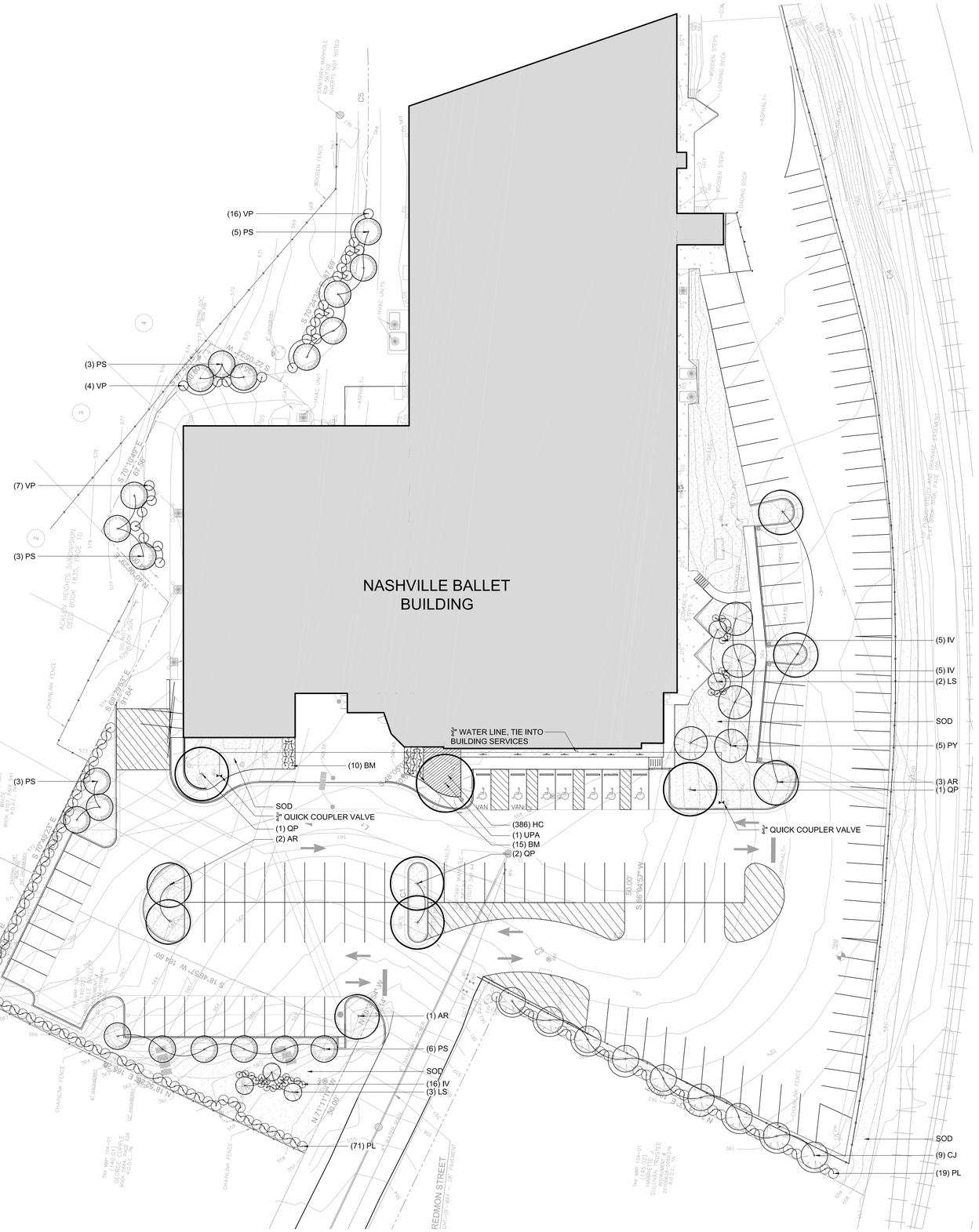

LANDSCAPE PLAN

0 10 20 40 60

HODGSON DOUGLAS
landscape architecture
planning . urban design
120 29th Ave. South
Nashville, Tennessee 37212
t. 615.327.4447 f. 615.321.3064
www.hodgsondouglas.com

ESa Architects
richard l. miller, architect
2100 West End Avenue, Suite 1200
Vanderbilt Plaza
Nashville Tennessee 37203
615-329-9445

This drawing and the design shown is the property of the architect. The reproduction, copying or use of this drawing without their written consent is prohibited and any infringement will be subject to legal action.

© ESa Architects 2010

Seals

PRELIMINARY
NOT FOR CONSTRUCTION

NASHVILLE BALLET EXPANSION & RENOVATION

3630 REDMON STREET - NASHVILLE, TN

Revisions

No.	Date	Description

Issue Description

Issue Date

Project No 131664

Drawn By MM | Checked By JH

Drawing Title

LANDSCAPE PLAN

Sheet Number

L1.01

12/17/2013 3:26:09 PM C:\Revit_Projects\Nashville Ballet Renovations 2013-10-16_ATZ_Central_cbarnes.rvt

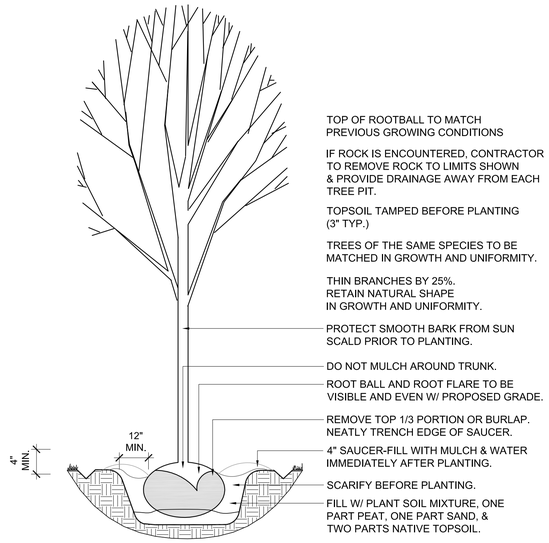

1 TREE PLANTING

N.T.S.

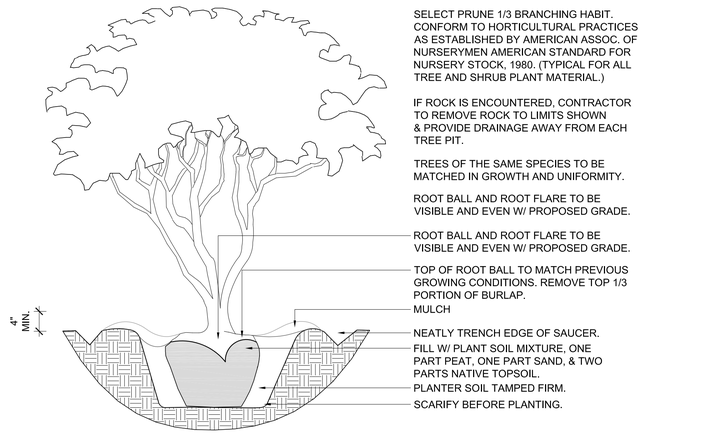

2 MULTI-TRUNK TREE PLANTING

N.T.S.

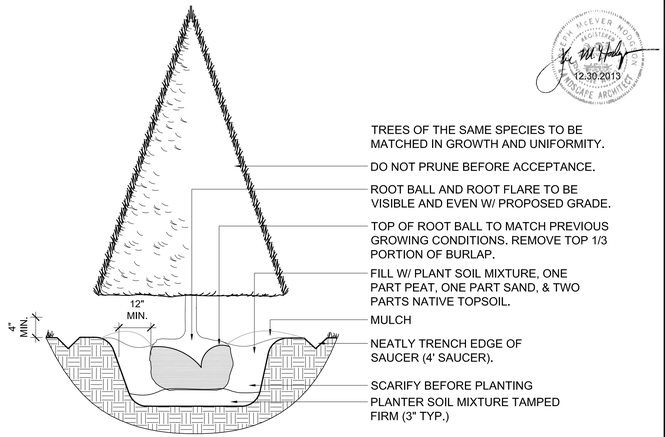

3 EVERGREEN TREE PLANTING

N.T.S.

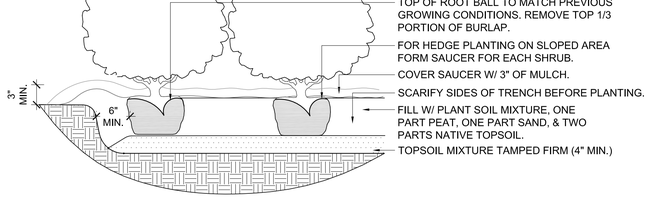

4 MASS SHRUB PLANTING

N.T.S.

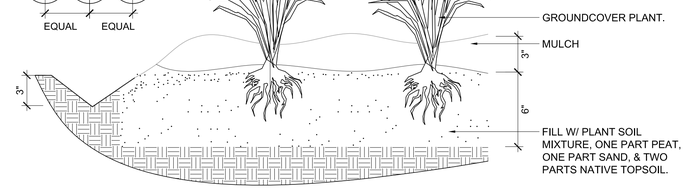

5 GROUNDCOVER PLANTING

N.T.S.

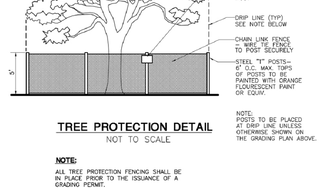

TREE PROTECTION DETAIL

NOT TO SCALE

NOTE:

ALL TREE PROTECTION FENCING SHALL BE IN PLACE PRIOR TO THE ISSUANCE OF A GRADING PERMIT.

6 TREE PROTECTION DETAIL

N.T.S.

PLANTING LEGEND

Nashville Ballet Plant Schedule

Group	Sym	Plant Key	Botanical Name	Common Name	Hgt	Sprd.	Caliper	Root	Spacing	Notes
Trees										
		AR	Acer rubrum 'October Glory'	October Glory Maple	12'	6'	2" cal.	B&B	As Shown	Dense, well-branched, full crown
		CJ	Cryptomeria Japonica	Japanese Cryptomeria	5'	3'		B&B	As Shown	Well- branched, dense, matched
		LS	Liquidambar styraciflua 'Rotundiloba'	Fruitless Sweetgum	8'	3'		B&B	As Shown	Skirted to ground, dense, matched
		PS	Pinus strobus	White Pine	5'	3'		B&B	As Shown	Dense, full to base, matched
		PY	Prunus x yedoensis	Yoshino Cherry	8'	5'	2 - 2 1/2" cal.	B&B	As Shown	Dense, well-branched, full crown
		QP	Quercus phellos	Willow Oak	12'	6'	3" cal.	B&B	As Shown	Dense, well-branched, full crown
		UPA	Ulmus parvifolia	Allee Elm	12'	5'	3" cal.	B&B	As Shown	Matched, full crown
Shrubs										
Group	**Sym**	**Plant Key**	**Botanical Name**	**Common Name**	**Hgt**	**Sprd.**	**Caliper**	**Root**	**Spacing**	**Notes**
		BM	Buxus microphylla 'Wintergreen'	Wintergreen Boxwood	20"	20"		B&B	3' O.C.	Dense, full, matched
		IV	Itea Virginica 'Little Henry"	Little Henry Sweetspire	24"	24"		B&B	4' O.C.	Dense, full, matched
		PL	Prunus laurocerasus 'Schipkaensis'	Schip Laurel	3'	3'		B&B	4 1/2' O.C.	Well-branched, dense, matched, upright variety
		VP	Viburnum x pragense	Pragense Viburnum	3'	3'		B&B	As Shown	Well-branched, dense, matched
Grasses and Groundcovers										
Group	**Sym**	**Plant Key**	**Botanical Name**	**Common Name**	**Hgt**	**Sprd.**	**Caliper**	**Root**	**Spacing**	**Notes**
		HC	Hypericum calycinum	Creeping St. John's Wort	12"	12"		4"pot	12" O.C.	
		SOD	TALL FESCUE	TALL FESCUE						Well-rooted, mature

PLANTING NOTES

1. TREAT ALL GROUNDCOVER BEDS WITH PRE-EMERGENT HERBICIDE PRIOR TO PLANTING. CONTRACTOR IS RESPONSIBLE FOR ALL WEEDING UNTIL FINAL ACCEPTANCE.
2. ALL PLANT BEDS TO BE NEATLY LAID IN WITH 3" DEEP TRENCH EDGING BORDER.
3. ALL GROUNDCOVER AND PLANT BEDS SHALL HAVE 2" OF SAND AND 2" OF PEAT MOSS OR FINE BARK PLACED OVER THE ENTIRE AREA AND THEN MIXED INTO THE TOP 8" OF SOIL WITH A TILLER. FINAL GRADES FOR ALL PLANT BEDS SHALL BE 1" BELOW EDGE OF WALK OR CURBING SO THAT WHEN 3" OF MULCH IS ADDED THE MULCH WILL BE 2" ABOVE THE WALKS. TAPER MULCH DOWN TO EDGE OF WALK OR CURB.
4. ALL AREAS WITHIN PLANT BEDS TO BE MULCHED WITH PINE STRAW.
5. ALL TREES OF A SIMILAR SPECIES TO BE MATCHED IN SIZE AND UNIFORMITY.
6. CONTRACTOR TO WARRANTY ALL PLANTINGS FOR A PERIOD OF ONE YEAR AFTER DATE OF FINAL ACCEPTANCE BY OWNER. WARRANTY TO INCLUDE ALL DEFECTS INCLUDING DEATH OR UNSATISFACTORY GROWTH; EXCEPT FOR DEFECTS RESULTING FROM LACK OF ADEQUATE MAINTENANCE, NEGLECT OR ABUSE BY OWNER, OR ABNORMAL WEATHER CONDITIONS UNUSUAL FOR WARRANTY PERIOD.
7. CONTRACTOR IS RESPONSIBLE FOR MAINTENANCE OF PLANTS UNTIL TIME OF FINAL ACCEPTANCE.
8. SOD ALL AREAS DISTURBED BY CONSTRUCTION AND NOT DESIGNATED AS GROUNDCOVER AREAS.
9. PROVIDE TREES, SHRUBS, AND PLANTS OF QUALITY, SIZE, GENUS, SPECIES AND VARIETY SHOWN AND SCHEDULED FOR LANDSCAPE WORK AND COMPLYING WITH RECOMMENDATIONS AND REQUIREMENTS OF ANSI Z60.1 "AMERICAN STANDARD FOR NURSERY STOCK". PROVIDE HEALTHY, VIGOROUS STOCK, GROWN IN A RECOGNIZED NURSERY IN ACCORDANCE WITH GOOD HORTICULTURAL PRACTICE AND FREE OF DISEASE, INSECTS, EGGS, LARVAE, AND DEFECTS SUCH AS KNOTS, SUN-SCALD, INJURIES, ABRASIONS OR DISFIGUREMENT. HEIGHT AND WIDTH SHOWN ARE MINIMUM SIZES.
10. DO NOT MAKE SUBSTITUTIONS. IF SPECIFIED LANDSCAPE MATERIAL IS NOT OBTAINABLE, SUBMIT PROOF OF NON-AVAILABILITY FROM A MINIMUM OF 6 SUPPLIERS TO LANDSCAPE ARCHITECT, TOGETHER WITH A PROPOSAL FOR USE OF EQUIVALENT MATERIAL PRIOR TO FINAL BID DATE.
11. SUBMIT TYPEWRITTEN INSTRUCTIONS RECOMMENDING PROCEDURES TO BE ESTABLISHED BY OWNER FOR MAINTENANCE OF LANDSCAPE WORK FOR ONE FULL YEAR; SUBMIT PRIOR TO EXPIRATION OF REQUIRED MAINTENANCE PERIOD.
12. DELIVER PACKAGED MATERIALS IN CONTAINERS SHOWING WEIGHT, ANALYSIS, AND NAME OF MANUFACTURER. PROTECT MATERIALS FROM DETERIORATION DURING DELIVERY AND WHILE STORED AT THE SITE.
13. DELIVER TREES AND SHRUBS AFTER PREPARATIONS FOR PLANTING HAS BEEN COMPLETED AND PLANT IMMEDIATELY. IF PLANTING IS DELAYED MORE THAN 6 HOURS AFTER DELIVERY, SET TREES AND SHRUBS IN SHADE, PROTECT FROM WEATHER AND MECHANICAL DAMAGE, AND KEEP ROOTS MOIST BY COVERING WITH MULCH, BURLAP, OR OTHER ACCEPTABLE MEANS OF RETAINING MOISTURE.
14. DETERMINE LOCATION OF UNDERGROUND UTILITIES AND PERFORM WORK IN A MANNER WHICH WILL AVOID POSSIBLE DAMAGE. HAND EXCAVATE AS REQUIRED. MAINTAIN GRADE STAKES SET BY OTHERS UNTIL REMOVAL IS MUTUALLY AGREED UPON BY PARTIES CONCERNED.
15. PROVIDE NEW TOPSOIL WHICH IS FERTILE, FRIABLE, NATURAL LOAM, SURFACE SOIL THAT IS REASONABLY FREE OF SUBSOIL, CLAY LUMPS, BRUSH, WEEDS, AND OTHER LITTER, AND FREE OF ROOTS, STUMPS, STONES LARGER THAN 2" IN ANY DIMENSION, AND OTHER EXTRANEOUS OR TOXIC MATTER HARMFUL TO PLANT GROWTH. TOPSOIL TO HAVE A MINIMUM OF 5-8% ORGANIC MATERIAL ESTABLISHED BY LABORATORY BURN TEST. OBTAIN TOPSOIL FROM LOCAL SOURCES OR FROM AREAS HAVING SIMILAR SOIL CHARACTERISTICS TO THAT FOUND ON SITE. OBTAIN TOPSOIL ONLY FROM NATURALLY, WELL-DRAINED, SITES WHERE TOPSOIL OCCURS IN A DEPTH OF NO LESS THAN 4"; DO NOT OBTAIN FROM BOGS OR MARSHES.
16. BEGIN MAINTENANCE IMMEDIATELY AFTER PLANTING. MAINTAIN TREES, SHRUBS, AND OTHER PLANTINGS BY PRUNING, WATERING, CULTIVATING AND WEEDING AS REQUIRED FOR HEALTHY GROWTH. RESTORE PLANTING SAUCERS. RESET TREES AND SHRUBS TO PROPER GRADES OR VERTICAL POSITION AS REQUIRED. SPRAY AS REQUIRED TO KEEP TREES AND SHRUBS FREE OF INSECTS AND DISEASE. MAINTAIN LAWN BY WATERING, FERTILIZING, WEEDING, MOWING, TRIMMING, AND OTHER OPERATIONS SUCH AS ROLLING, REGRADING, AND REPLANTING AS REQUIRED TO ESTABLISH A SMOOTH, ACCEPTABLE LAWN, FREE OF ERODED OR BARE AREAS.
17. WHERE INSPECTED LANDSCAPE WORK DOES NOT COMPLY WITH REQUIREMENTS, REPLACE REJECTED WORK AND CONTINUE SPECIFIED MAINTENANCE UNTIL REINSPECTED BY LANDSCAPE ARCHITECT AND FOUND TO BE ACCEPTABLE. REMOVE REJECTED PLANTS AND MATERIALS PROMPTLY FROM PROJECT SITE.
18. THE QUANTITIES INDICATED ON THE PLANT SCHEDULE AND PLAN ARE PROVIDED FOR THE CONVENIENCE OF THE CONTRACTOR. THE CONTRACTOR SHALL BE RESPONSIBLE FOR HIS/HER OWN QUANTITY CALCULATION AND THE LIABILITY WHICH PERTAINS TO THOSE QUOTATIONS. ANY DISCREPANCY SHALL BE CALLED TO THE ATTENTION OF THE LANDSCAPE ARCHITECT IMMEDIATELY.
19. LOCATIONS OF ALL PLANT BEDS AND TREES TO BE STAKED AND APPTOVED BY LANDSCAPE ARCHITECT PRIOR TO PLANTING.
20. SCARIFY ALL TREE PITS BEFORE PLANTING. VERIFY THAT ALL TREE PITS ADEQUATELY DRAIN BEFORE PLANTING TREES.
21. IF ROCK IS ENCOUNTERED, CONTRACTOR TO REMOVE ROCK AND PROVIDE DRAINAGE AWAY FROM EACH TREE PIT.
22. SHRUBS AND GROUNDCOVER BEDS TO BE PLANTED IN A TRIANGULAR SPACING. SEE PLANTING SCHEDULE FOR DISTANCES.
23. PROVIDE TRUE RADII FOR THE LAYOUT OF ALL PLANT BEDS.

LANDSCAPE DETAILS

HODGSON DOUGLAS
landscape architecture
planning . urban design
120 29th Ave. South
Nashville, Tennessee 37212
t. 615.327.4447 f. 615.321.3004
www.hodgsondouglas.com

ESa Architects
richard l. miller, architect
2100 West End Avenue, Suite 1200
Vanderbilt Plaza
Nashville Tennessee 37203
615-329-9445

This drawing and the design shown is the property of the architect. The reproduction, copying or use of this drawing without their written consent is prohibited and any infringement will be subject to legal action.
© ESa Architects 2010

Seals

PRELIMINARY
NOT FOR CONSTRUCTION

NASHVILLE BALLET EXPANSION & RENOVATION

3630 REDMON STREET - NASHVILLE, TN

Revisions

No.	Date	Description

Issue Description	
Issue Date	
Project No	131664
Drawn By	MM
Checked By	JH

Drawing Title

LANDSCAPE DETAILS

Sheet Number

L1.02

12/17/2013 3:26:09 PM C:\Revit_Projects\Nashville Ballet Renovations 2013-10-15_A12_Central_sbonnes.rvt